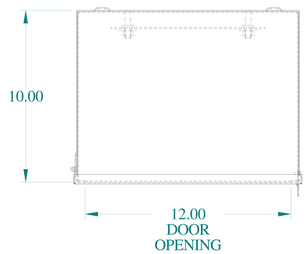


TOP VIEW

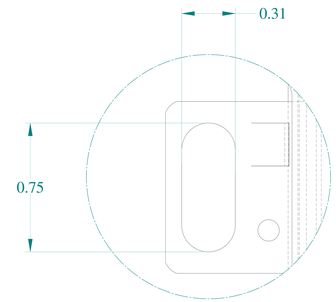


DETAIL Z
TYP

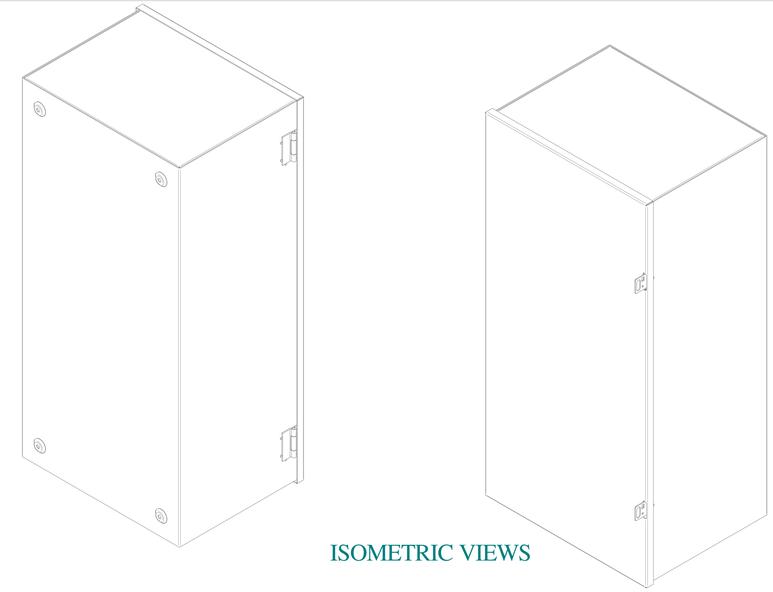

ISOMETRIC VIEWS

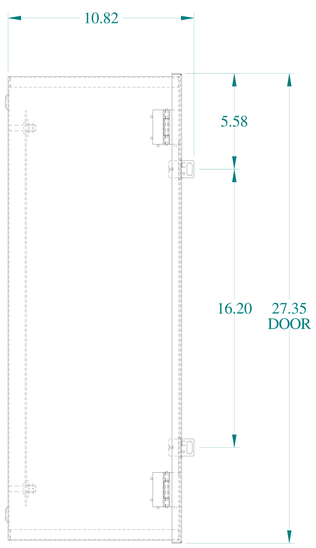


SIDE VIEW

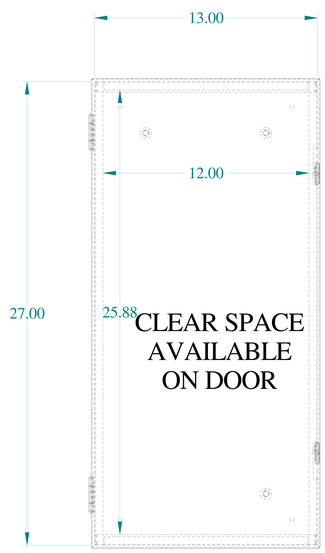


FRONT VIEW

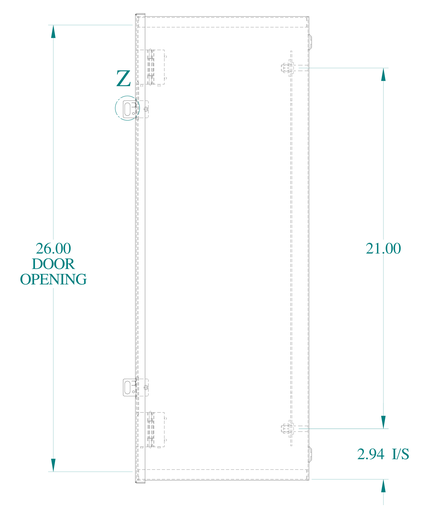


SIDE VIEW

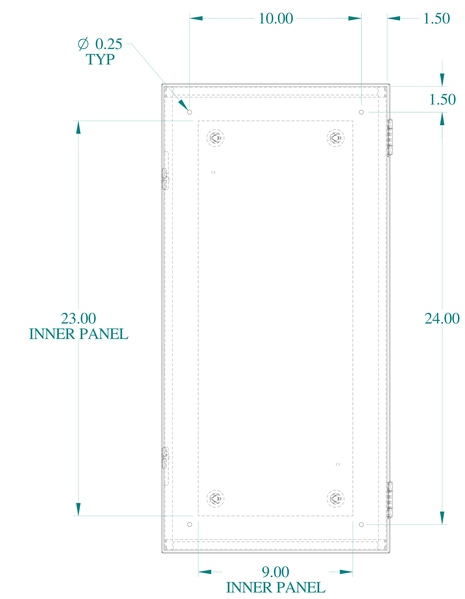


SIDE VIEW

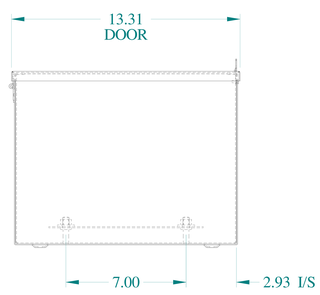


BOTTOM VIEW

HAMMOND MANUFACTURING®

www.hammondmfg.com

Data subject to change without notice.

| | |
|---|---|
| Part # : CMC271310 | Date : Mar. 23, 2019 |

Link:www.hammfg.com/CMC271310