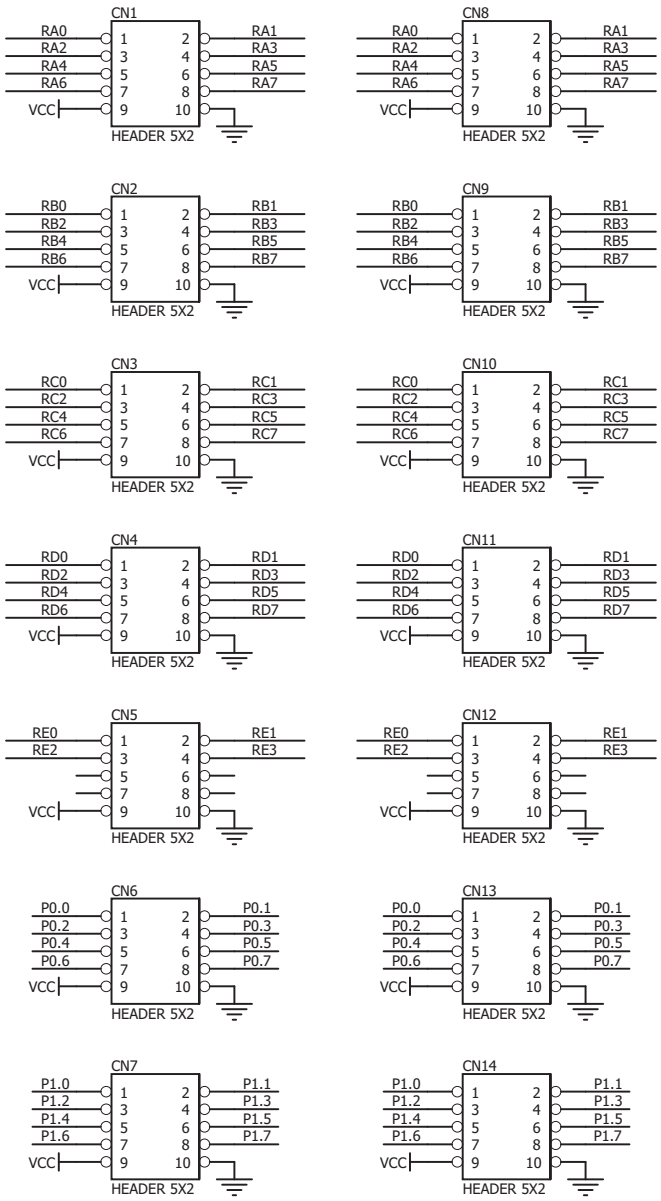

mikroElektronika
DEVELOPMENT TOOLS - COMPILERS - BOOKS
WEB: www.mikroe.com
FORUM: www.mikroe.com/forum

EASY-PIC6 PROTO Board Schematic v102

MikroElektronika Development systems