* Insulation: Glass filled polyester UL 94V-0
* Contact: Brass
* For Tin-Lead Wave Flow Process

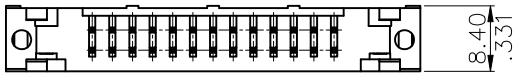

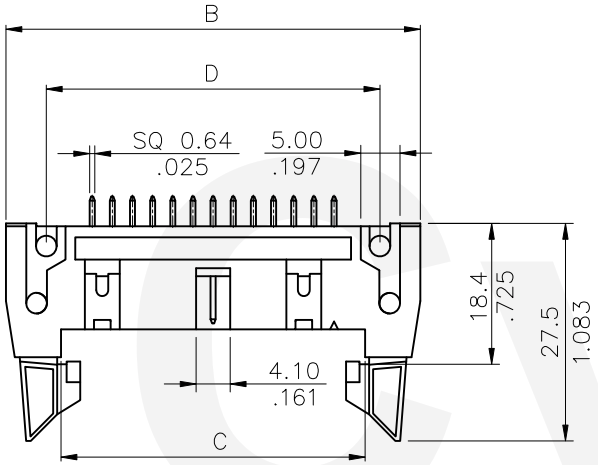

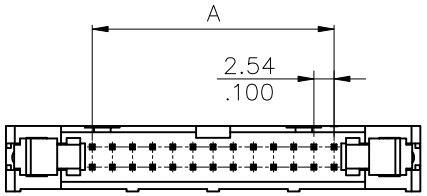

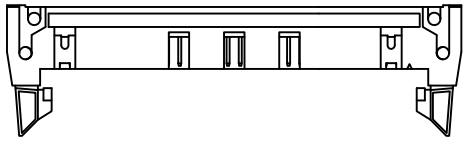

60.64.Pin

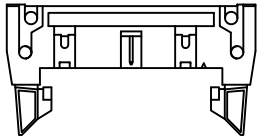

20~50.Pin

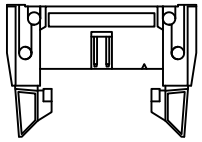

10.14.16.Pin

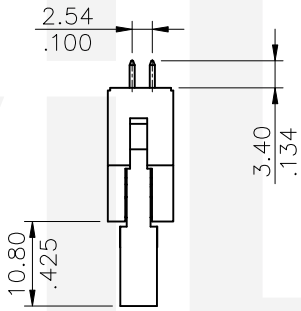

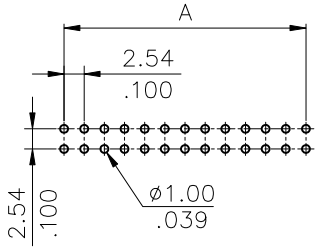

Recommended P.C. Board Layout

Ordering Code

CH88 ** * C 1 00-B

① ② ③ ④ ⑤ ⑥

① Series No.
② No. of Contacts
③ Plating option :
1= 3.05μm(120μ") Min. Tin over 0.76μm(30μ") Nickel
2= Gold Flash plated over 1.27μm(50μ") Nickel
3= 0.38μm(15μ") Gold plated over 1.27μm(50μ") Nickel
4= 0.76μm(30μ") Gold plated over 1.27μm(50μ") Nickel
④ C= With short latch/Straight
⑤ Color : 1= Black
⑥ Pin Length Option Code:
00-B= Standard

Circuits	Dimension			
	A	B	C	D
10	10.16 (.400)	31.87 (1.255)	17.90 (.705)	21.70 (.854)
14	15.24 (.600)	36.95 (1.455)	22.95 (.904)	26.88 (1.058)
16	17.78 (.700)	39.48 (1.554)	25.50 (1.004)	29.27 (1.152)
20	22.86 (.900)	44.62 (1.757)	30.58 (1.204)	34.50 (1.358)
24	27.94 (1.100)	49.67 (1.956)	35.70 (1.406)	39.50 (1.555)
26	30.48 (1.200)	52.23 (2.056)	38.25 (1.506)	42.05 (1.656)
30	35.56 (1.400)	57.30 (2.256)	43.35 (1.707)	47.20 (1.858)
34	40.64 (1.600)	62.38 (2.456)	48.40 (1.906)	52.15 (2.053)
40	48.26 (1.900)	69.95 (2.754)	56.05 (2.207)	59.90 (2.358)
50	60.96 (2.400)	82.70 (3.256)	68.70 (2.705)	72.55 (2.856)
60	73.66 (2.900)	95.45 (3.758)	81.50 (3.209)	85.25 (3.356)
64	78.74 (3.100)	100.60 (3.961)	86.40 (3.402)	90.35 (3.557)

Tin-Lead Process

RoHS Compliant

SYM	NAME	DATE	REVISIONS
4			
3			
2			
1			

CVILUX CORP 2021.02.04 ISSUED

		DATE
DRAWN BY:	Sandy	11/12-20'
ENGINEER:	Sun	11/13-20'
CHECKED BY:	Eisley	11/18-20'
APPROVED BY:	Eisley	11/18-20'

UNIT: mm / inch

TOLERANCE UNLESS OTHERWISE SPECIFIED

.X ± 0.30/.012	X.° ±
.XX ± 0.20/.008	.X° ±
.XXX ± 0.10/.004	.XX° ±

TITLE: 2.54MM(.100") STRAIGHT DUAL ROW SHROUDED HEADER

MATERIAL:

FINISH:

瀚荃股份有限公司 CviLux Corporation

DRAWING NO.	CH8853SA	PART NO.	CH88***C100-B
SCALE	1 / 1	SHEET 1 OF 1	