used for: D-SUB π FILTER

No. of pos.	A $^{-0.76}$	B $^{+0.25}$	C	D $^{-0.3}$	Part No.
9	31.19	16.79	25.00 $^{+0.12}_{-0.13}$	6.12	**241A29200X**
15	39.52	25.12	33.30 $^{+0.15}_{-0.1}$	6.12	**241A29210X**
25	53.42	38.84	47.04 ±0.13	5.99	**241A29220X**
37	69.70	55.30	63.50 ±0.13	5.99	**241A29230X**

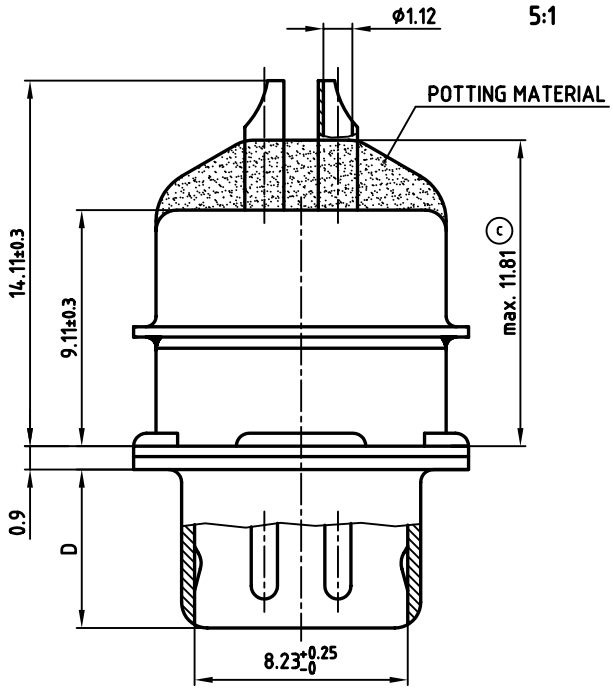

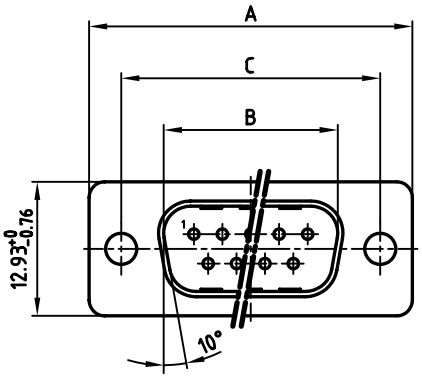

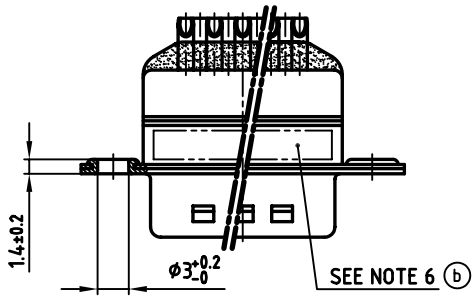

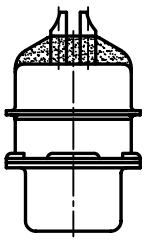

NOTES:

1. METALSHELLS: STEEL; min. 315µin TIN over 40-80µin NICKEL
2. INSULATORS: HIGH TEMPERATURE PLASTIC UL 94 V-0, BLACK
3. CONTACTS: COPPER ALLOY
   PLATING: 8µin HARD GOLD over min. 50µin NICKEL
   SOLDER CUP ACCEPTS CABLE AWG 20
4. CAPACITANCE: 2 x 1300pF ±20%
5. DIELECTRIC WITHSTANDING VOLTAGE: 424 VDC
6. CONNECTOR IS PART MARKED: PART-NO. CONEC ABC

Directive 2002/95/EC „RoHS" Compliant

APPROVAL # FREIGABE # DEBLOCAGE # AUTOR/ZACION # APPROVAL

CUSTOMER APPROVAL DATE:

NAME: TITLE:

COMPANY NAME:

THIS DRAWING MAY NOT BE COPIED OR REPRODUCED IN ANY WAY, AND MAY NOT BE PASSED ON TO A THIRD PARTY WITHOUT WRITTEN PERMISSION. OWNERSHIP AND COPYRIGHT OF CONEC GmbH

DO NOT ALTER CAD DRAWING BY HAND

rev.	description	date	name
1 x c	Ä 2725	13.06.2007	Lehmen.
1 x b	Ä 2311	07.09.2005	Lehmen.
a	Origin		

tolerance

2002	date	name
drawn	20.09.	E. Mickenbecker
appd.	20.09.	J. Resonnek
norm		
d-old		

CONEC®

scale: 2:1 (5:1)
material: SEE NOTES

title:
D-SUB π FILTER MALE
9-37pos. SOLDER CUP

dwg no: 24K2A134A
AutoCAD 2000 | DIN-A 3 | sh:2/2

part no: SEE TABLE