REV.	DATE	DESCRIPTION
NC	09/19/02	INITIAL RELEASE

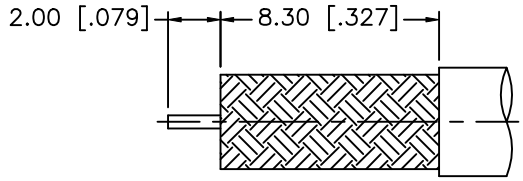

RECOMMENDED
CABLE STRIPPING DIM'S

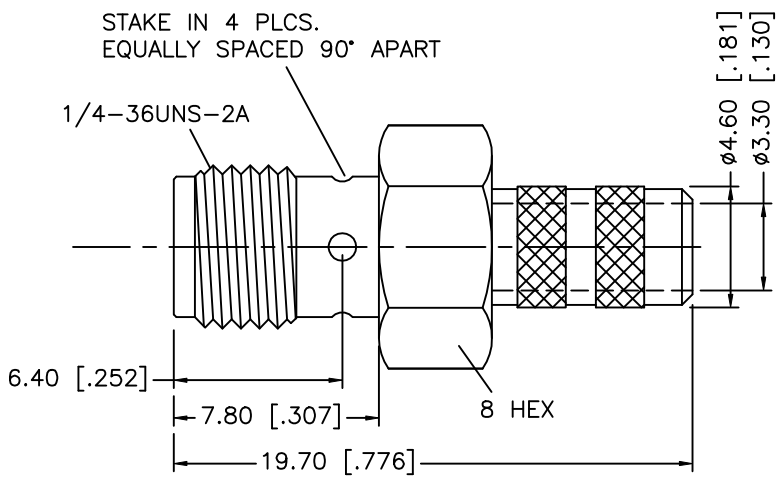

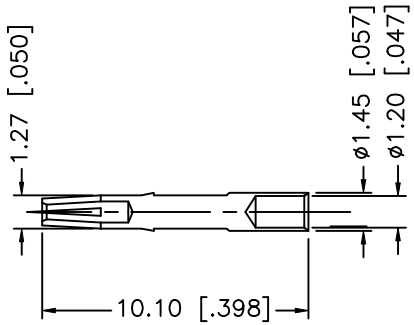

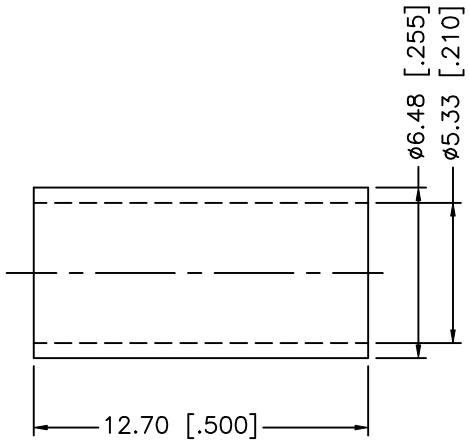

CRIMP NOTES:

1. CRIMPED FERRULE
   HEX CRIMP SIZE .213"
2. CONTACT PIN TO SOLDER

	DESCRIPTION	MATERIAL	FINISH
8			
7			
6			
5			
4	FERRULE	COPPER	GOLD
3	CONTACT PIN	BER. COPPER	GOLD
2	INSULATOR	TEFLON	NATURAL
1	BODY	BRASS	GOLD

UNLESS OTHERWISE SPECIFIED DIMENSIONS ARE IN MILLIMETERS

DIMENSIONS IN [ ] ARE IN INCHES FOR CUSTOMER REFERANCE ONLY

UNLESS OTHERWISE SPECIFIED TOLERANCES FOR INCHES ARE:

.XXX = ± 0.005"
.XX = ± 0.010"
.X = ± 0.020"

DO NOT SCALE DRAWING

APPROVALS		DATE
DRAWN	G.R.S.	09/19/02
CHECKED		
ISSUED		

Amphenol - Connex
CONNECTOR CORPORATION

TITLE: SMA CRIMP JACK (FOR TIMES LMR-200)

SIZE	FSCM NO.	DWG. NO.	REV.
A	99001	132236.DWG	NC

SCALE	PART NO.	SHEET
NA	132236	1 OF 1