NOTES:

1. MATERIALS AND FINISHES:
   BODY, LOCKWASHER, RETAINING RING
   & HEX NUT - BRASS, NICKEL PLATING
   CONTACT - BeCu, GOLD PLATING
   BULLET CONTACT - BRASS, GOLD PLATING
   FERRULE - COPPER, NICKEL PLATING
   INSULATOR - PTFE, NATURAL
   INSULATOR DISC - ULTEM, NATURAL
   GASKET & O-RING - SILICONE RUBBER, RED

2. ELECTRICAL:
   A. IMPEDANCE: 50 OHM
   B. FREQUENCY RANGE: DC - 11 GHz
   C. VSWR(RETURN LOSS): 1.20 MAX. @ DC - 6 GHz
      1.40 MAX. @ 6-11 GHz
   D. DIELECTRIC WITHSTANDING VOLTAGE: 1000 VRMS, MIN.

3. MECHANICAL:
   A. DURABILITY: 500 CYCLES MIN.
   B. TEMPERATURE RANGE: -60° C TO +165° C

4. PACKAGING:
   A. QUANTITY: SINGLE PACK
   B. MARKING: BAG TO BE MARKED
      "AMPHENOL RF, 31-6922, DATE CODE"

5. RECOMMENDED CABLE ASSEMBLY INSTRUCTIONS:
   A. TRIM CABLE AS SHOWN.
   B. SLIDE FERRULE AND INSULATOR DISC ONTO CABLE.
   C. SOLDER CABLE CENTER CONDUCTOR TO BULLET CONTACT.
   D. INSERT CABLE ENTERING CONNECTOR AND BRAID OVER KNURL.
   E. CRIMP FERRULE OVER BRAID WITH .213" HEX DIE.

6. RECOMMENDED TORQUE APPLIED ON HEX NUT: 7-10 IN LBS

7 SHOWS CABLE ENTRY DIMENSIONS.

REVISIONS

REV	DESCRIPTION	DATE	ECN	APPR
A	RELEASE TO MFG.	24-MAR-21	15614	SH

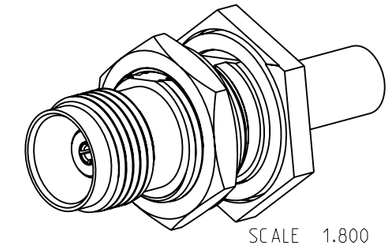

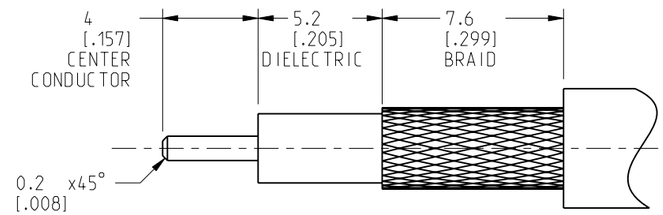

RECOMMENDED CABLE STRIPPING DIMENSIONS

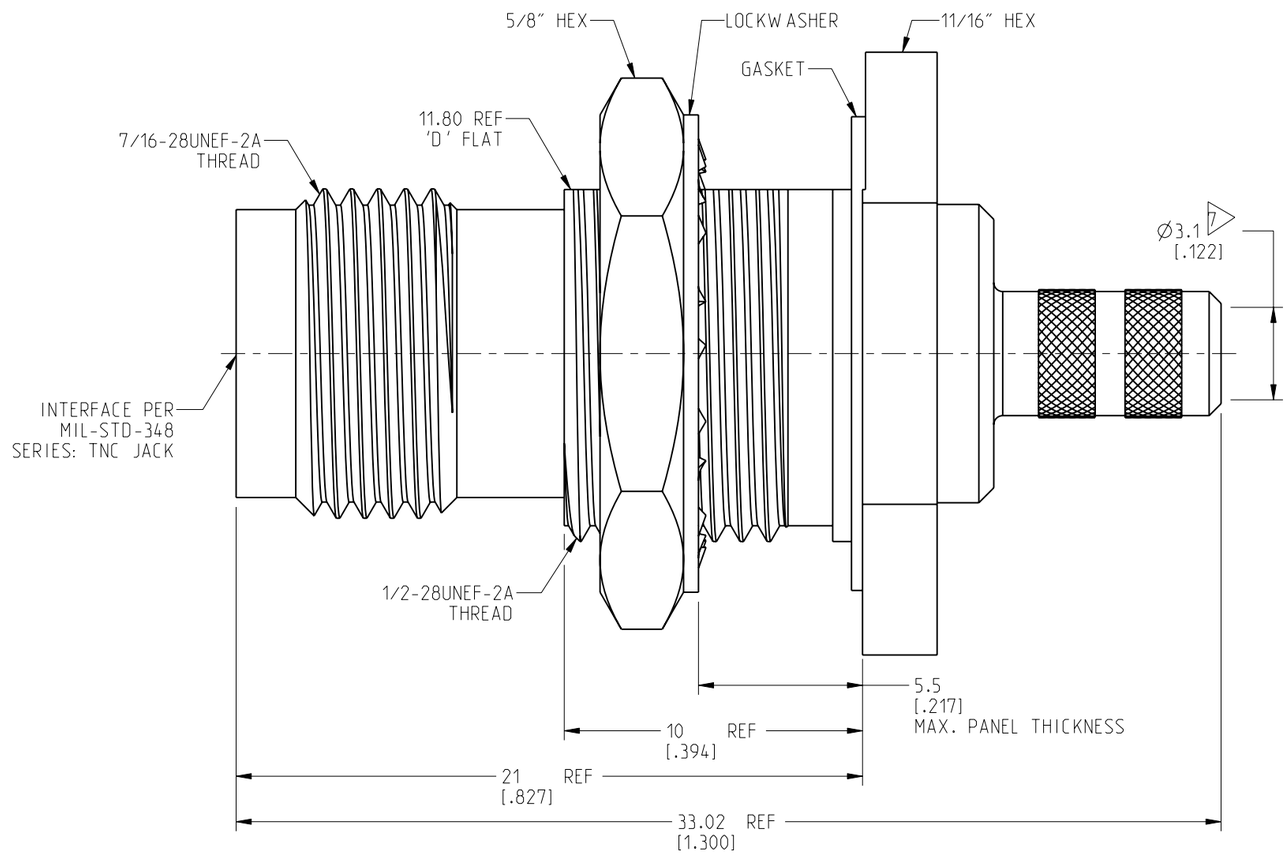

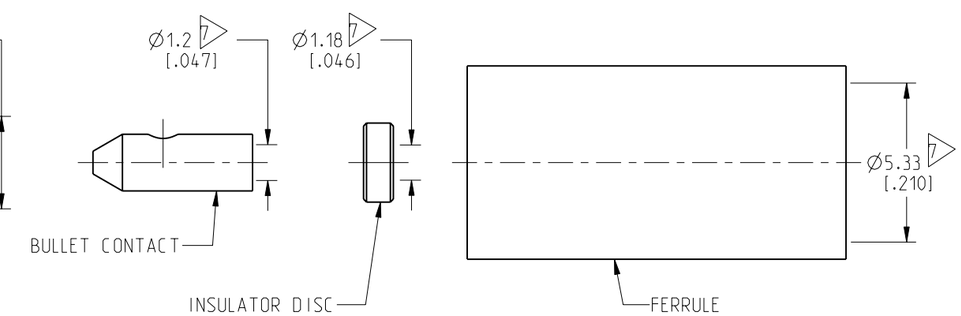

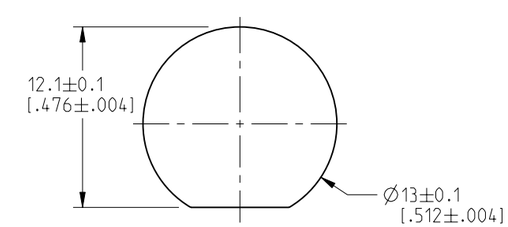

RECOMMENDED MOUNTING HOLE DIMENSIONS

CUSTOMER OUTLINE DRAWING

ALL OTHER SHEETS ARE FOR INTERNAL USE ONLY

NOTICE: These drawings, specifications, or other data (1) are, and remain the property of Amphenol corp. (2) must be returned upon request; and (3) are confidential and not to be disclosed to any person other than those to whom they are given by Amphenol Corp. The furnishing of these drawings, specifications, or other data by Amphenol Corp., or to any other person to anyone for any purpose is not to be regarded by implication or otherwise in any manner licensing, granting rights to permitting such holder or any other person to manufacture, use or sell any product, process or design, patented or otherwise, that may in any way be related to or disclosed by said drawings, specifications, or other data.

THIRD ANGLE PROJ.

REFERENCE

EAR# 10076

UNLESS OTHERWISE SPECIFIED
DIMENSIONS ARE METRIC [INCHES] AND TOLERANCES ARE:
<0.5mm = ±0.05mm [<0.020 = ±0.002]
>0.5 - 6mm = ±0.1mm [>0.020 - 0.236 = ±0.004]
>6.00 - 30mm = ±0.2mm [>0.236 - 1.181 = ±0.008]
>30.00 - 120mm = ±0.3mm [>1.181 - 4.725 = ±0.012]
ANGLES = ±1°

MATERIAL: SEE NOTES

ENGINEER: WIKI

DATE: 4-Mar-21

TITLE: TNC STR BHD JACK IP67 FOR RG-142 CABLE

SHEET NO. 2 OF 2

SCALE: 5.0:1.0

Amphenol RF

SIZE: B

DRAWING NO. 31-6922

ITEM NO. 31-6922

PART NO. 31-6922

REV: A