ON Semiconductor®
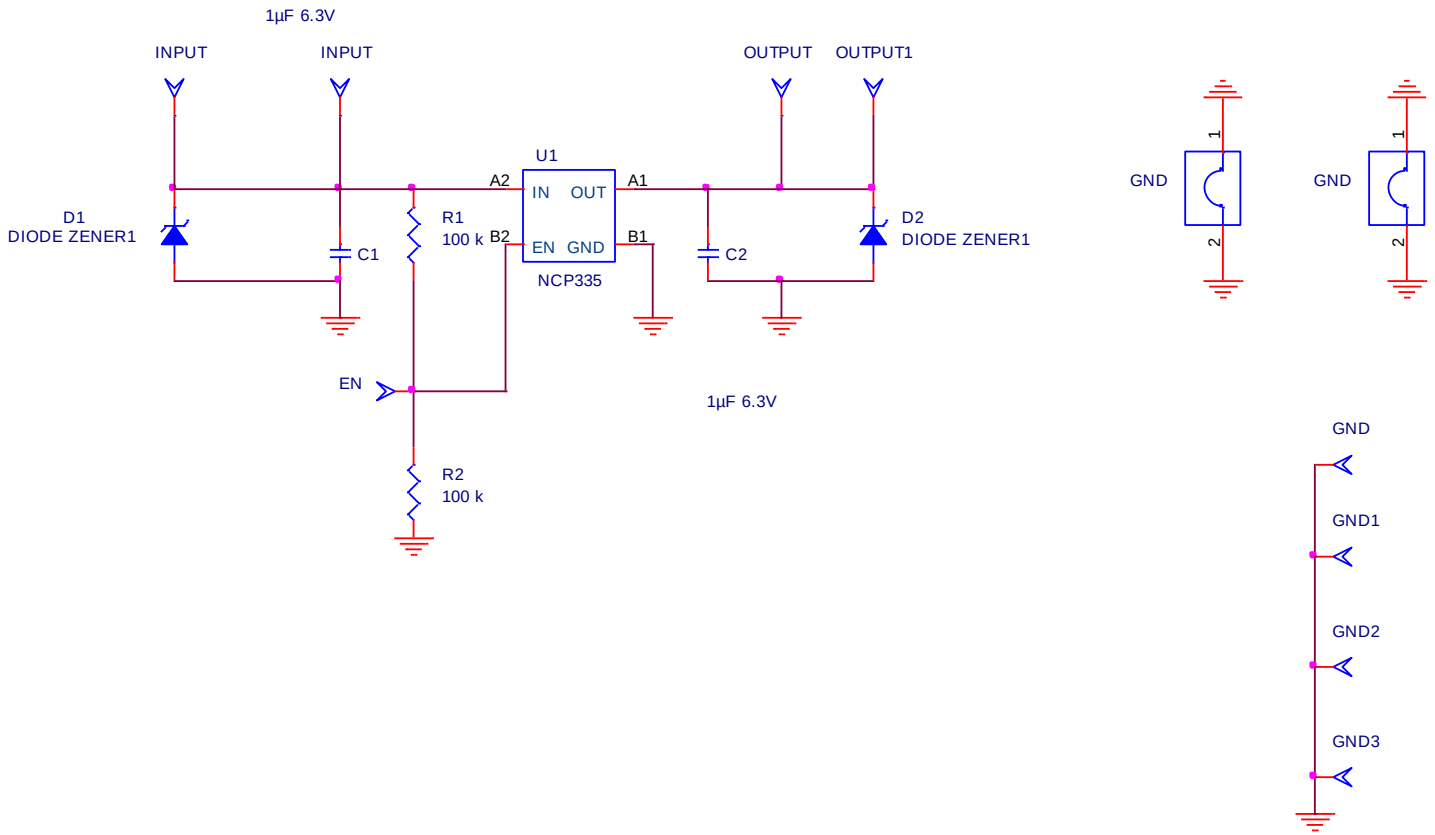
Schematic for the NCP334FCT2GEVB Evaluation Board