THIS DRAWING IS UNPUBLISHED. RELEASED FOR PUBLICATION 20
© COPYRIGHT 20 BY - ALL RIGHTS RESERVED.

REVISIONS

P	LTR	DESCRIPTION	DATE	DWN	APVD
	A	INITIAL RELEASE	11MAY2015	DL	CW
	B	ECR-20-010477	28DEC2020	BS	CW
	B1	ECR-22-149504	15AUG2022	RG	CW

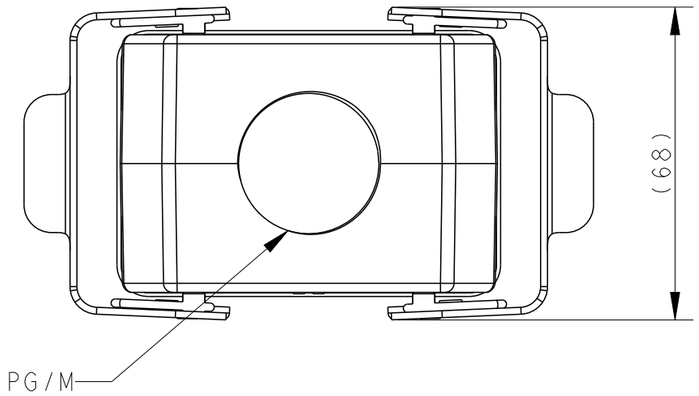

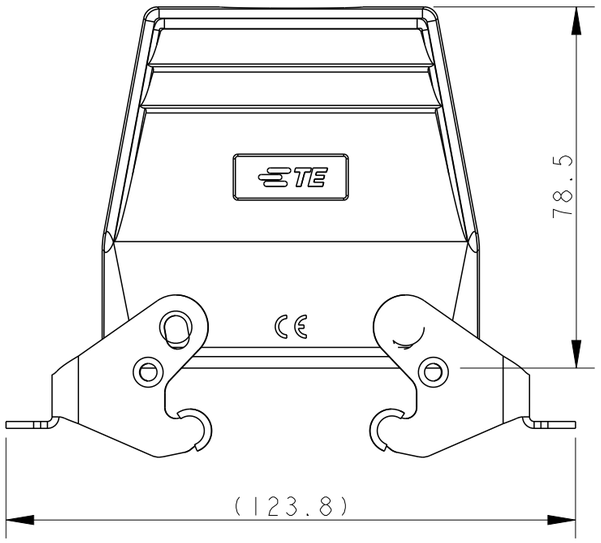

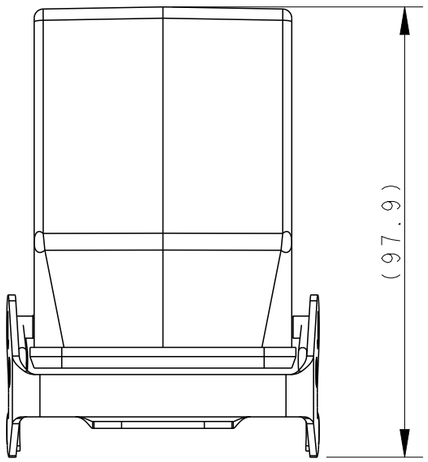

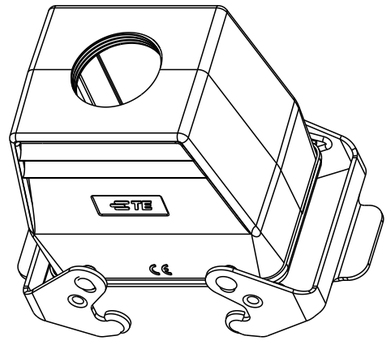

SCALE 1:2

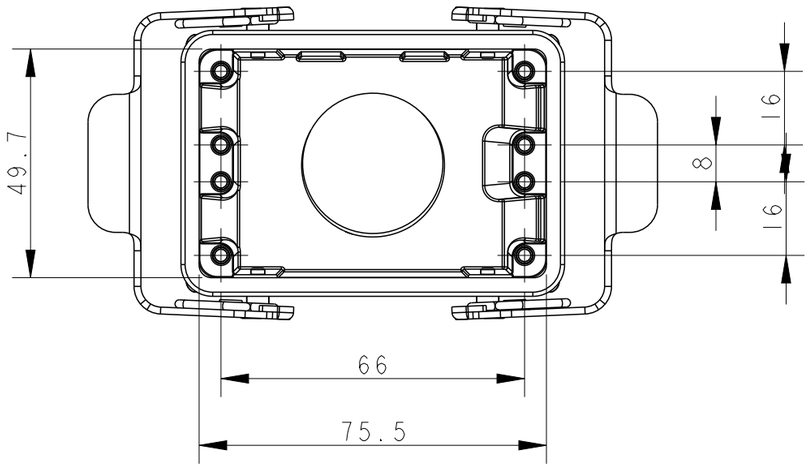

NOTES:
1. TECHNICAL CHARACTERISTICS:
   BODY MATERIAL: DIE CAST ALUMINIUM ALLOY
   SURFACE TREATMENT: POWDER-COATED, GRAY
   DEGREE OF PROTECTION: IP65 (MATED)

注释：
1. 技术参数：
   主体材料： 铝合金
   表面处理： 粉末喷涂， 灰色
   防护等级： IP65(配合)

ASSEMBLY PART NUMBER	ASSEMBLY PART DESCRIPTION	PG/M
T1739320129-000	H32A-TBF-PG29	PG29
T1739320121-000	H32A-TBF-PG21	PG21
T1739320132-000	H32A-TBF-M32	M32

THIS DRAWING IS A CONTROLLED DOCUMENT.

DIMENSIONS: mm

TOLERANCES UNLESS OTHERWISE SPECIFIED:
0 PLC ±-
1 PLC ±-
2 PLC ±-
3 PLC ±-
4 PLC ±-
ANGLES ±-

MATERIAL - -

FINISH - -

DWN DAVID LI 11MAY2015
CHK CHRIS WANG 11MAY2015
APVD XU XIANG 11MAY2015
PRODUCT SPEC 108-137010
APPLICATION SPEC 114-137010
WEIGHT -

TE Connectivity

NAME H32A-TBF-PG/M

SIZE A3 | CAGE CODE - | DRAWING NO C-T1739320 1XX000 | RESTRICTED TO

CUSTOMER DRAWING | SCALE 3:4 | SHEET 1 OF 1 | REV B1