FEMALE INSERT
FRONT VIEW

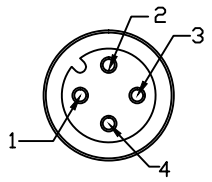

1 BROWN
2 WHITE
3 BLUE
4 BLACK

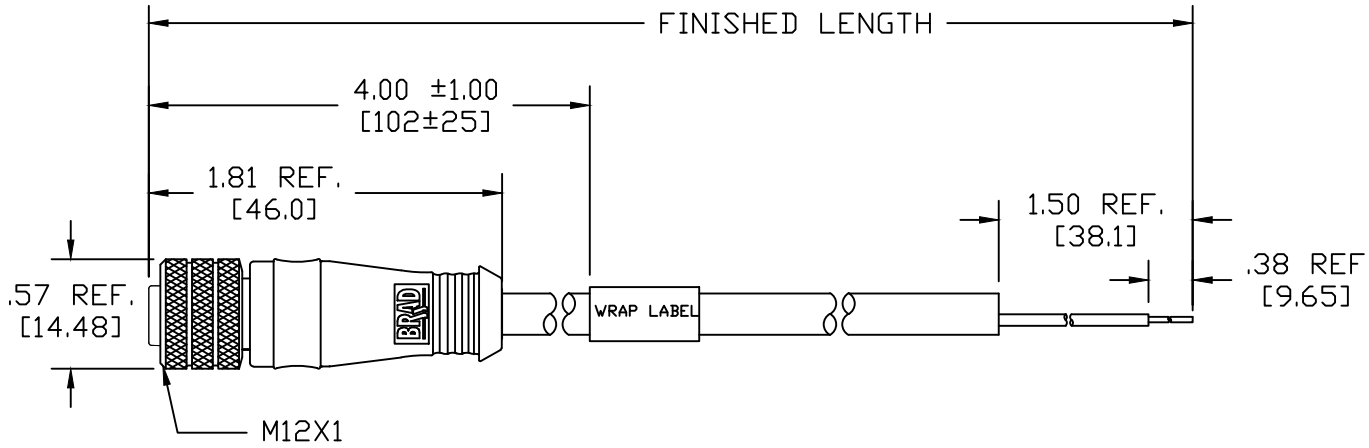

MECHANICAL
CONTACT : GOLD/NICKEL OVER COPPER ALLOY
INSERT : BLACK PUR
O-RING: RED VITON
COUPLING NUT: TEFLON COAT OVER NICKEL PLATED BRASS
MOLDED BODY: GRAY PVC
CABLE: 20 AWG 4 CONDUCTORS LIGHT GRAY PVC JACKET
CABLE MARKING: KRL-45/CM KURAMO E200151-K (UL) CM
OR CL3 4C20AWG 75C AWM 2464 80C 300V VW-1…C(UL)
CM 4C20AWG 75C AWM I A/B 80C 300V FT1
1-BROWN 2-WHITE 3-BLUE 4-BLACK ** LF
WRAP LABEL: MYLAR WHITE WITH BLACK LETTERS

ELECTRICAL
VOLTAGE RATING: 250V AC/DC
AMPERAGE: 4A

ENVIRONMENTAL
PROTECTION: IP67 PER IEC 60529
IP68 PER SPEC PS-120001-001
OPERATION TEMP: 0°C~75°C

804000J11M020

Wire type
20/4C AWG light
Gray PVC

cable length
M020----2 Meter
M100----10 Meter

RELEASE		
EC NO: WEU2012-0002	DRWN: TWOLDEGE 2011/07/19	CHKD: VOU ---
APPR: JFMURPHY 2012/04/17	DESCRIPTION	REV A

QUALITY SYMBOLS
▼=0
(C)=0

GENERAL TOLERANCES (UNLESS SPECIFIED)

	mm	INCH
4 PLACES	±---	±---
3 PLACES	±---	±.005
2 PLACES	±0.13	±.010
1 PLACE	±.25	±.020
ANGULAR ±1/2°		

DRAFT WHERE APPLICABLE MUST REMAIN WITHIN DIMENSIONS

DIMENSION STYLE: IN/MM
SCALE: 1:1
DESIGN UNITS: INCH
THIRD ANGLE PROJECTION

DRAWN BY: TWOLDEGE DATE: 2011/07/19
CHECKED BY: VOU DATE: ---
APPROVED BY: JFMURPHY DATE: 2012/04/17
MATERIAL NO.

TITLE: MICRO CHANGE ASSEMBLY
4-POLE FEMALE STRAIGHT
20/4 AWG LIGHT GRAY PVC

molex MOLEX INCORPORATED

DOCUMENT NO.: SD-120001-005
SHEET NO.: 1 OF 1
SIZE: A

THIS DRAWING CONTAINS INFORMATION THAT IS PROPRIETARY TO MOLEX INCORPORATED AND SHOULD NOT BE USED WITHOUT WRITTEN PERMISSION