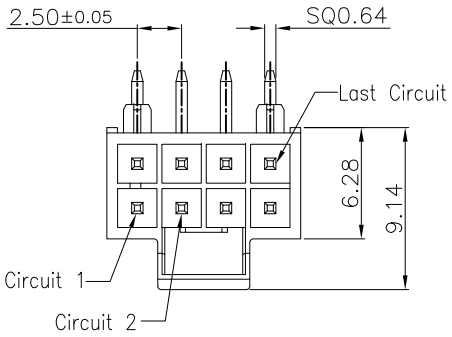

Specifications:
Current rating:6.5A AC,DC
Voltage rating:250V AC, DC
Contact tesistance:10m ohm Max
Insulation resistance:1000M ohm Min
Withstanding voltage:AC 1500V AC/minute
Operating Temperature:−40°C ~ +105°C

Materials:
Insulator:High Temp Plastic (LCP UL94V−0)
Insulator Color:Black
Terminal:Brass
Finish:Tin Plated

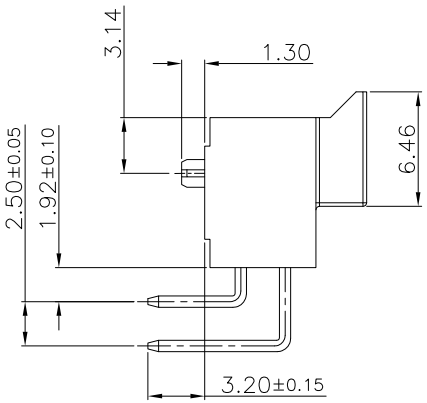

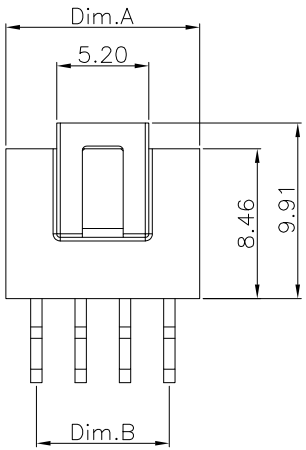

Circuits	Dimension	
	A	B
4	5.94	2.50
6	8.44	5.00
8	10.94	7.50
10	13.44	10.00
12	15.94	12.50
14	18.44	15.00
16	20.94	17.50
18	23.44	20.00

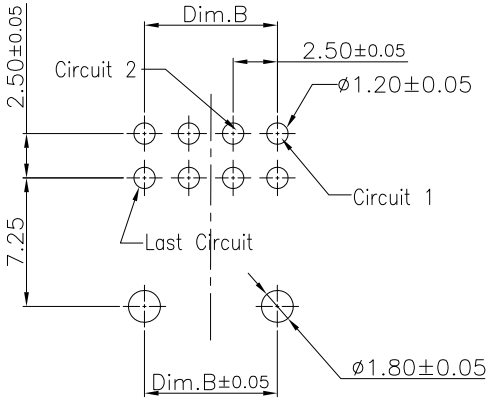

P.C.B Layout

RoHS Compliant

REV	DATE	FILE	BY
	17−Nov−2020		

DRAWN:

CHECKED:

APPROVAL:

GENERAL TOLERANCE:
.X=±0.20
.XX=±0.15

UNIT: MM

SCALE:1:1

SHEET: 1 / 1

PROJECTION:

CnC Tech
Industrial Cable and Connector Technology

DESCRIPTION: Wire To Board Header,2.5mm, R/A, Tin Plated, Front Lock

PART NO: 54025-XX-0200-01

SIZE A4