THIS COPY IS PROVIDED ON A RESTRICTED BASIS AND IS NOT TO BE USED IN ANY WAY DETRIMENTAL TO THE INTERESTS OF PANDUIT CORP.

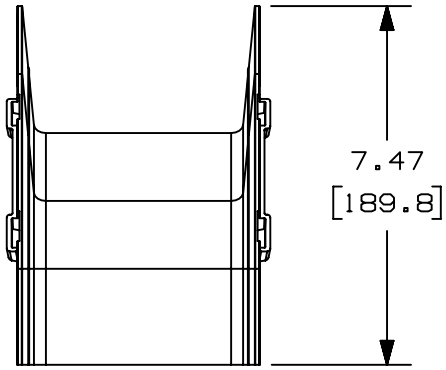

NOTES:

1. SEE CURRENT CATALOG FOR ADDITIONAL PART SUFFIXES TO INDICATE COLOR AND/OR PACKAGE QUANTITY.
2. THE FIBERRUNNER 4x4 OUTSIDE VERTICAL 45° ANGLE FITTING IS DESIGNED WITH A MINIMUM 2" (50.8) BEND RADIUS TO PROTECT FIBER OPTIC CABLES.
3. DIMENSIONS IN PARENTHESES ARE IN METRIC.
4. PARTS SUPPLIED:
   (1)- OUTSIDE VERTICAL 45

PANDUIT PART NUMBER	WEIGHT	MATERIAL
FROV454X4**	0.44 LB/EACH (201g/EACH)	ABS
FROV454X4L**	0.44 LB/EACH (201g/EACH)	PC/ABS

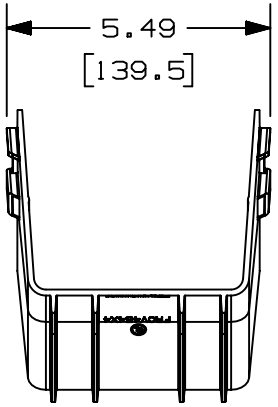

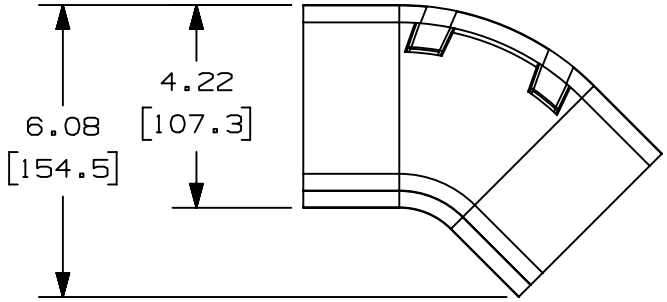

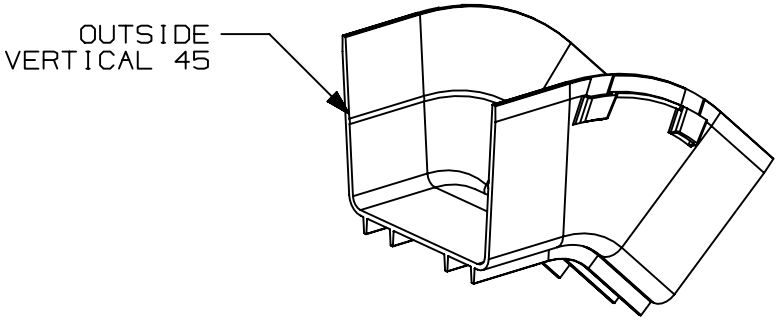

REV	DATE	BY	CHK	APR	DESCRIPTION	ECN
06A	8/26/20	MEX-JAGC	DWR	DWR	ADDED PART NUMBER UPDATED DRAWING BORDER & TITLE BLOCK	V09002DZ/11

TITLE
FIBERRUNNER 4x4 OUTSIDE VERTICAL
45° ANGLE FITTING (FROV454X4**, FROV454X4L**)
CUSTOMER DRAWING

ITEM REVISION NAME: D37847BR/06

DATASET FILE NAME: D37847BR_DC_FROV454X4/06A

PANDUIT

MATERIAL: SEE PART NUMBER TABLE ABOVE

THIRD ANGLE PROJECTION

DRAWING NUMBER: 37847-63

DRAWN BY	DATE	CHK	SCALE	SIZE
JHNU	7/17/01	LD	NONE	A

SHT 1 OF 1

D10100DA/20