REVISION HISTORY				
ECO	REV	DESCRIPTION	APPROVED	DATE
—	2	2ND PROTOTYPE	PINKESH S.	05-20-20

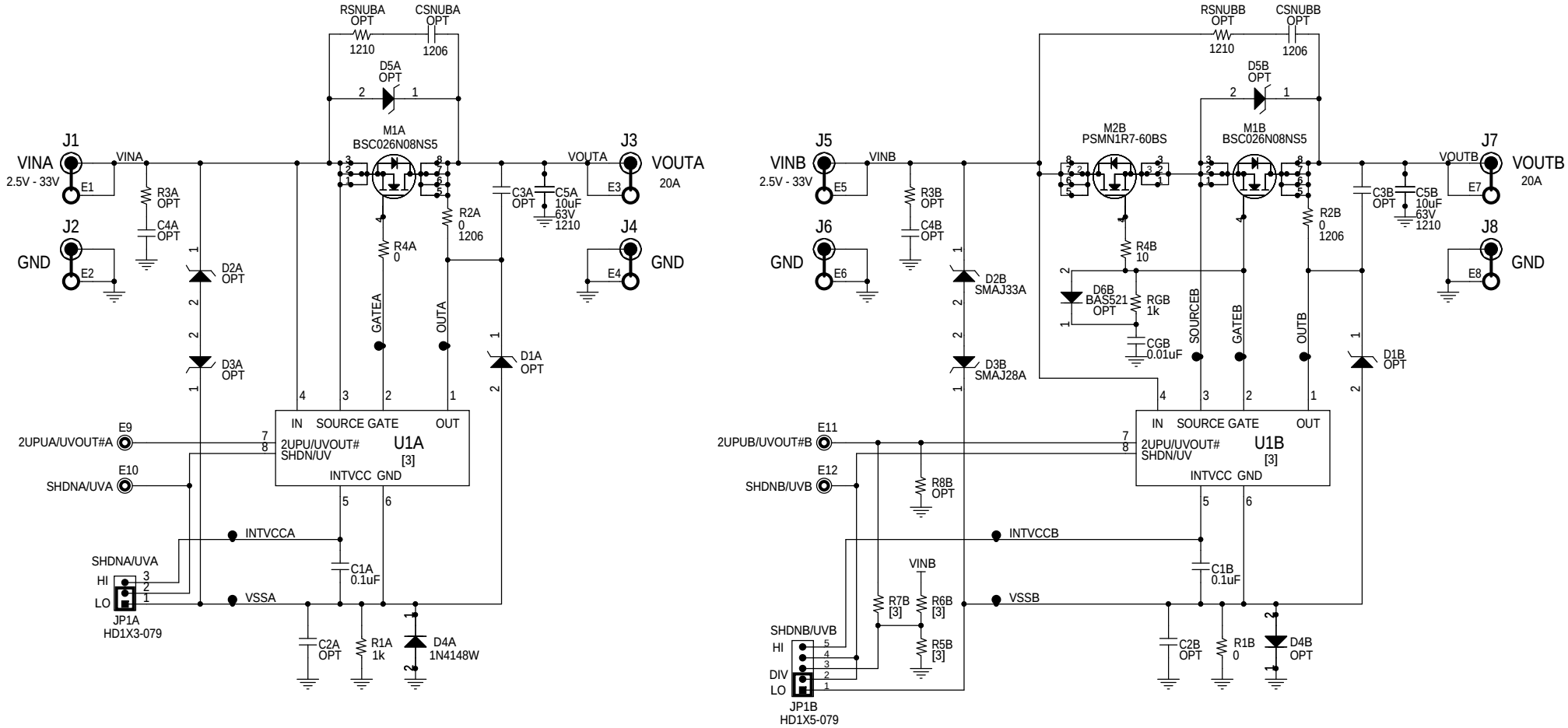

NOTE: UNLESS OTHERWISE SPECIFIED

1. ALL RESISTORS AND CAPACITORS ARE 0805.
2. INSTALL SHUNTS AS SHOWN.

[3]. ASSEMBLY TABLE:

ASSY. TYPE	U1A, U1B	SUFFIX	R5B	R6B	R7B
DC2969A - A	LTC4372	2	OPT	OPT	OPT
DC2969A - B	LTC4373	3	1.2M	1.3M	3.4M

4. THERE ARE MULTIPLE FOOTPRINTS ON MULTIPLE LOCATIONS, FOR CUSTOMER USE ONLY.

CUSTOMER NOTICE

ADI HAS MADE A BEST EFFORT TO DESIGN A CIRCUIT THAT MEETS CUSTOMER-SUPPLIED SPECIFICATIONS; HOWEVER, IT REMAINS THE CUSTOMER'S RESPONSIBILITY TO VERIFY PROPER AND RELIABLE OPERATION IN THE ACTUAL APPLICATION. COMPONENT SUBSTITUTION AND PRINTED CIRCUIT BOARD LAYOUT MAY SIGNIFICANTLY AFFECT CIRCUIT PERFORMANCE OR RELIABILITY. CONTACT ADI APPLICATIONS ENGINEERING FOR ASSISTANCE.

THIS CIRCUIT IS PROPRIETARY TO ADI AND SUPPLIED FOR USE WITH ADI PARTS.

APPROVALS	
PCB DES.	KIM T.
APP ENG.	PINKESH S.

SCALE = NONE

ANALOG DEVICES | POWER BY LINEAR
2555 AUGUSTINE DRIVE
SANTA CLARA, CA 95054
www.analog.com

TITLE: SCHEMATIC

LOW QUIESCENT CURRENT DUAL IDEAL DIODES

SIZE	IC NO.	REV.
N/A	LTC4372HMS8, LTC4373HMS8 DEMO CIRCUIT 2969A	2

DATE: Wednesday, May 20, 2020

SHEET 1 OF 1