THIS DRAWING IS UNPUBLISHED. RELEASED FOR PUBLICATION -,- .
© COPYRIGHT - TE Connectivity ALL RIGHTS RESERVED.

REVISIONS

P	LTR	DESCRIPTION	DATE	DWN	APVD
	J2	REVISED PER ECR-18-005392	27NOV2018	BDA	SG

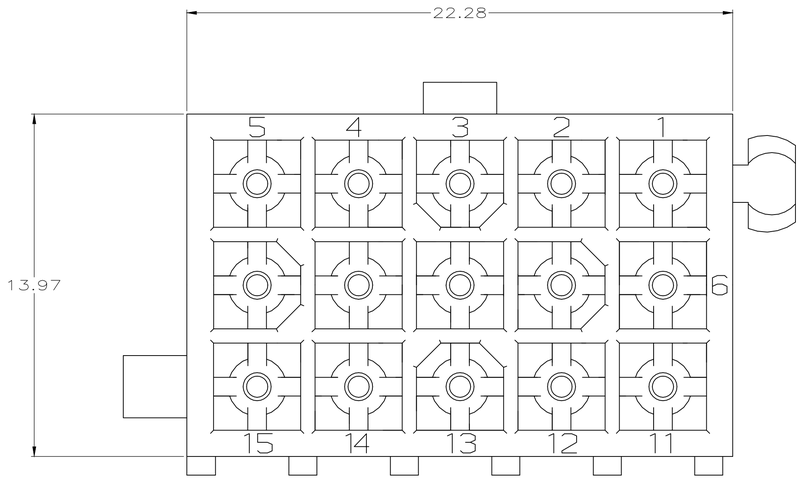

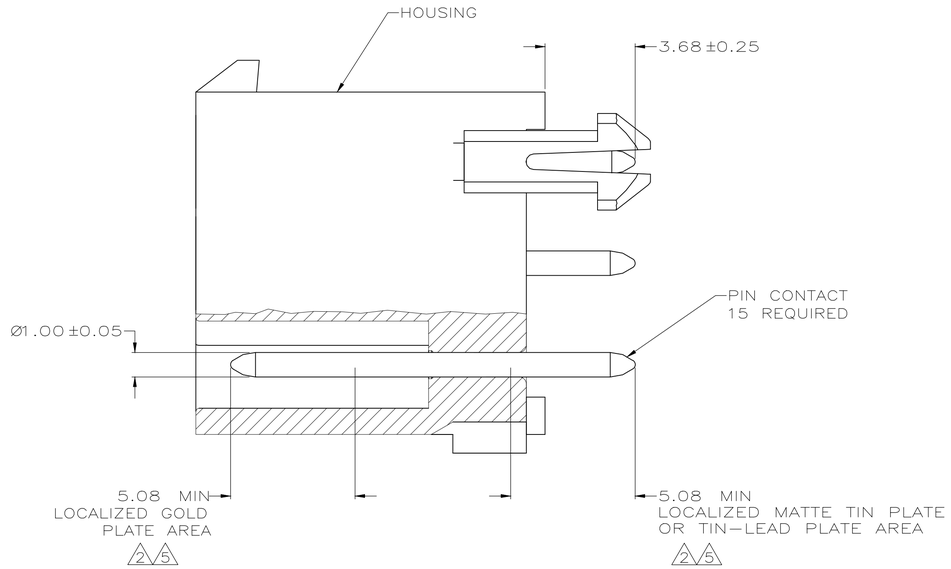

1. PINS TO COMPLY WITH AMP SOLDERABILITY SPEC 109-11-3.

2. 0.00076 MIN GOLD PLATE IN THE LOCALIZED PLATE AREA, 0.00381 MATTE TIN LEAD IN THE LOCALIZED PLATE AREA, BOTH OVER 0.00127 MIN NICKEL.

3. 0.00381 MIN MATTE TIN LEAD OVER 0.00127 MIN NICKEL.

4. 0.00381 MIN MATTE TIN OVER 0.00127 MIN NICKEL.

5. 0.00076 MIN GOLD PLATE IN THE LOCALIZED PLATE AREA, 0.00381 MATTE TIN IN THE LOCALIZED PLATE AREA, BOTH OVER 0.00127 MIN NICKEL.

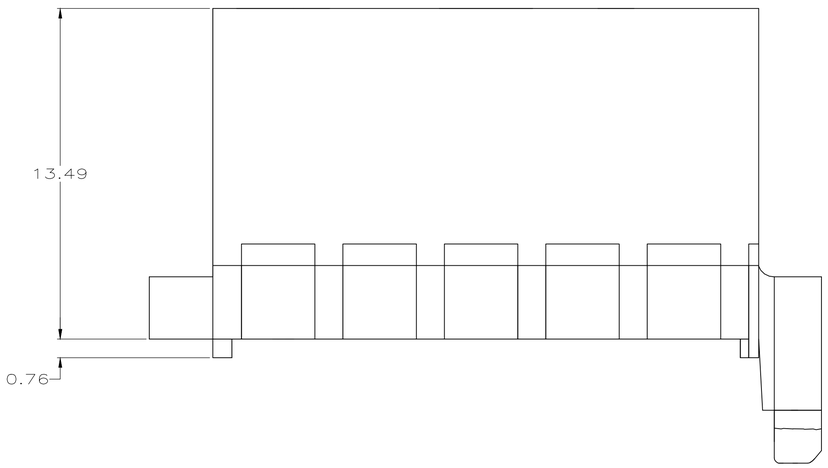

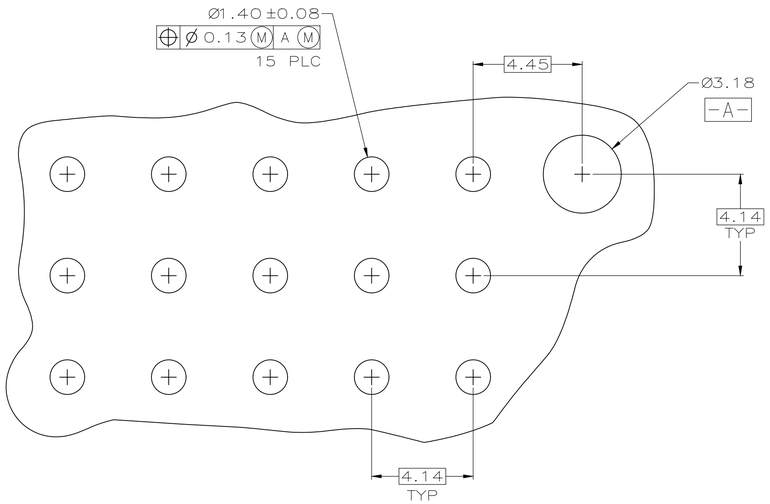

RECOMMENDED MOUNTING HOLE PATTERN
FOR 1.57 THICK P.C. BOARD

	MATERIAL	FINISH	MATERIAL	COLOR	PART NO.
	PIN		HOUSING		
	BRASS, GOLD	5	NYLON, UL94V-0	WHITE	1-770859-1
	BRASS, TIN	4	NYLON, UL94V-0	WHITE	1-770859-0
OBSOLETE	BRASS, GOLD	2	NYLON, UL94V-0	WHITE	~~770859-2~~
	BRASS, TIN-LEAD	3	NYLON, UL94V-0	WHITE	~~770859-1~~

THIS DRAWING IS A CONTROLLED DOCUMENT.

DIMENSIONS: mm

TOLERANCES UNLESS OTHERWISE SPECIFIED:
0 PLC ± -
1 PLC ± -
2 PLC ± 0.13
3 PLC ± -
4 PLC ± -
ANGLES ± -

MATERIAL -
FINISH -

DWN S CARPENTER 08JUN05
CHK R JONES 29JUL2003
APVD R JONES 29JUL2003
PRODUCT SPEC —
APPLICATION SPEC —
WEIGHT

TE Connectivity

NAME HEADER ASSEMBLY, 15 CKT, DOUBLE ROW VERTICAL MINI UNIVERSAL MATE-N-LOK

SIZE	CAGE CODE	DRAWING NO	RESTRICTED TO
A1	00779	C-770859	—

CUSTOMER DRAWING | SCALE 8:1 | SHEET 1 OF 1 | REV J2

4805 (1/15)