THIS DRAWING IS UNPUBLISHED. RELEASED FOR PUBLICATION -.- .
© COPYRIGHT - BY TYCO ELECTRONICS CORPORATION. ALL RIGHTS RESERVED.

LOC	DIST
AD	39

REVISIONS

P	LTR	DESCRIPTION	DATE	DWN	APVD
	C1	ECO-06-16525	02OCT06	MB	JO

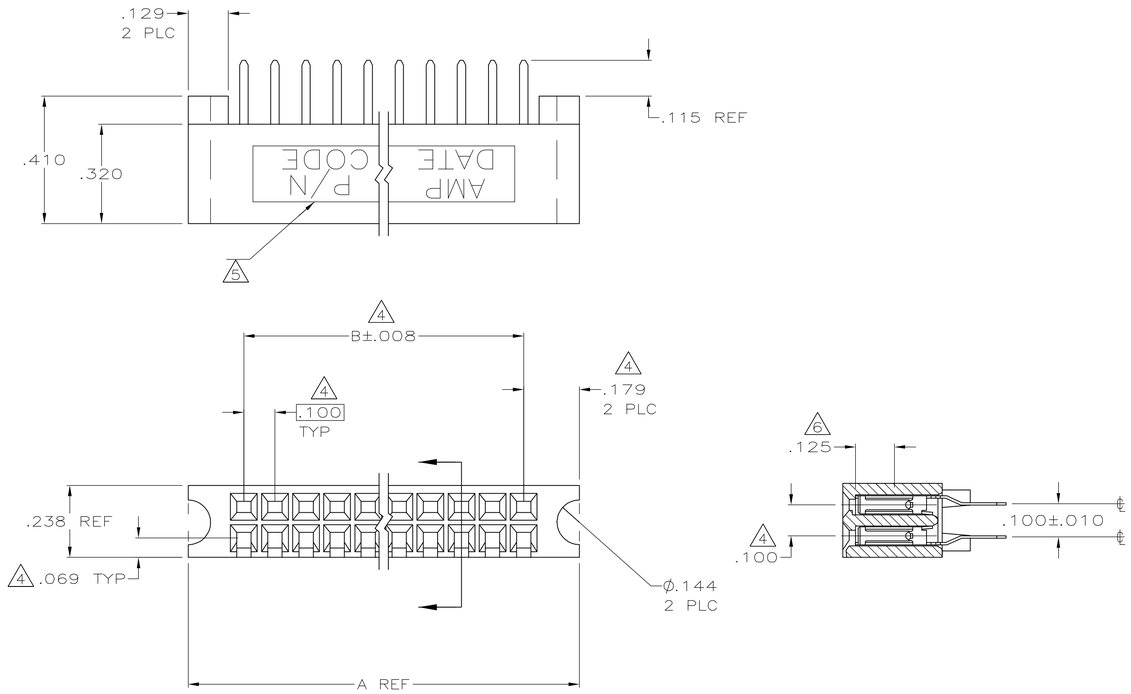

1. POLYPHENYLENE SULFIDE.
2. PHOSPHER BRONZE.
3. DUPLEX PLATED: .000030 GOLD IN CONTACT AREA, .000050-.000100 BRIGHT TIN-LEAD ON LEADS, ALL OVER .000050 NICKEL.
4. THESE DIMENSIONS PERTAIN TO CAVITY ℄'S ONLY, NOT TO CONTACT LOCATIONS.
5. "AMP","CSA", DATE CODE AND PART NUMBER MARKED WITH .062±.015 HIGH CHARACTERS. THE ORDER AND LOCATION ARE OPTIONAL.
6. POINT-OF-MEASUREMENT FOR PLATING THICKNESS INSIDE BEAMS.
7. AVERAGE INSERTION FORCE IS 2.75 OUNCES OR LESS. MINIMUM WITHDRAW FORCE IS .50 OUNCE.
8. DUPLEX PLATED: .000030 GOLD IN CONTACT AREA, .000050-.000100 MATTE TIN ON LEADS, ALL OVER .000050 NICKEL.
9. ROHS 2002/95/EC COMPLIANT.

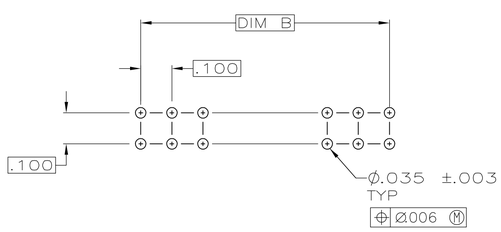

RECOMENDED HOLE LAYOUT

8	3.900	4.258	80	9 5-535681-1
3	3.900	4.258	80	535681-1
FINISH	B	A	NO. OF POSN	PART NO.

THIS DRAWING IS A CONTROLLED DOCUMENT.

DIMENSIONS: INCHES

TOLERANCES UNLESS OTHERWISE SPECIFIED: DO NOT SCALE DRAWING

0 PLC	± -
1 PLC	± -
2 PLC	± -
3 PLC	± .005
4 PLC	± -
ANGLES	± -

MATERIAL - 1 2

FINISH SEE TABLE

DWN R. BOLES 4/29/93
CHK H. DALEY 4/29/93
APVD -
PRODUCT SPEC —
APPLICATION SPEC —
WEIGHT —

tyco Electronics
Tyco Electronics Corporation
Harrisburg, PA 17105-3608

NAME
ASSEMBLY, MOD II DOUBLE ROW,
.100 X .100 CENTERLINE, VERTICAL MOUNTED
LOW FORCE, SHORT POINT-OF-CONTACT

SIZE	CAGE CODE	DRAWING NO	RESTRICTED TO
A1	00779	C-535681	—

CUSTOMER DRAWING | SCALE 4:1 | SHEET 1 OF 1 | REV C1