NOTES:

1. MATERIAL: 0.008" TIN PLATED STEEL PER ASTM A623/A624
2. PARTS PER REEL: 250

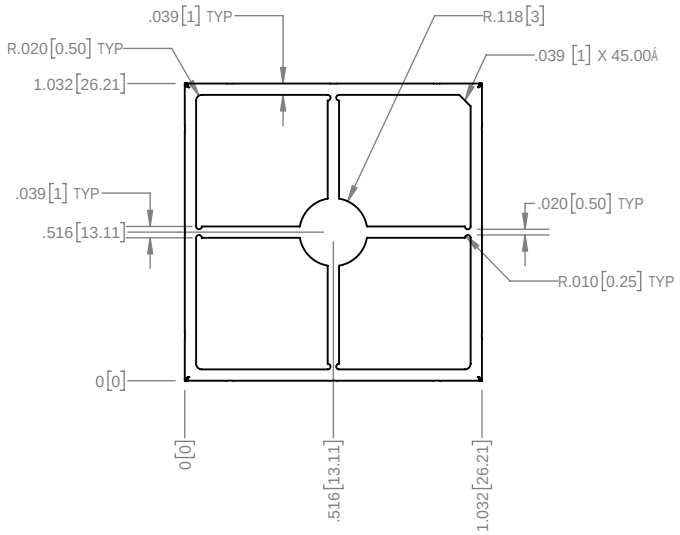

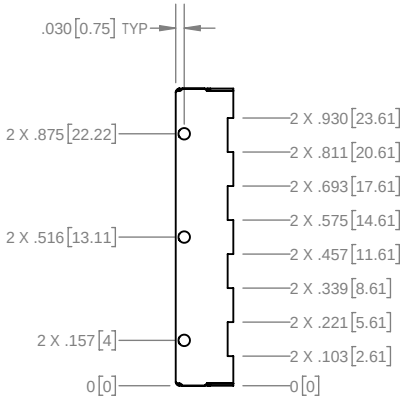

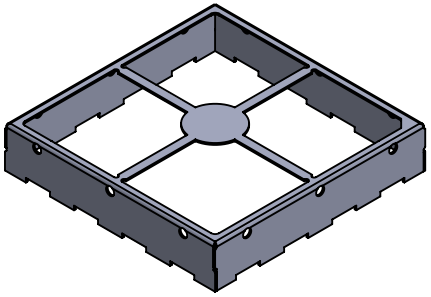

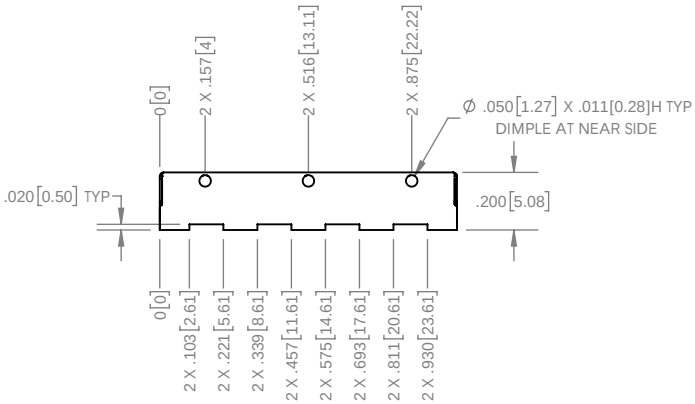

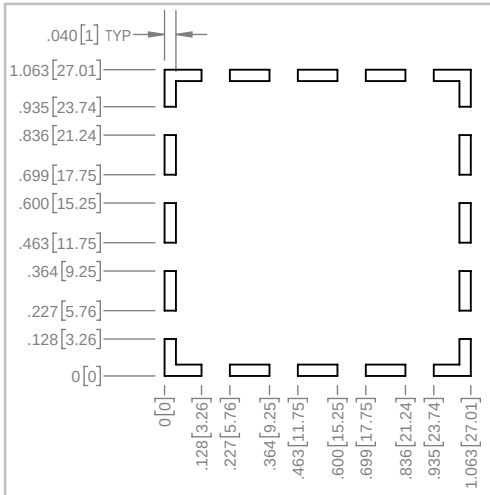

PCB FOOTPRINT

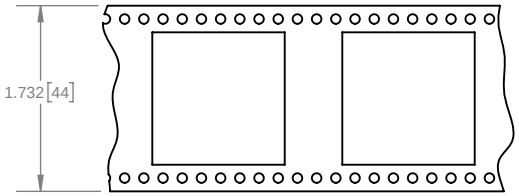

TAPE AND REEL

PROPRIETARY NOTICE: THESE DRAWINGS, LISTS OR SPECIFICATIONS ARE THE CONFIDENTIAL INFORMATION AND/OR TRADE SECRETS OF 3G SHIELDING SPECIALTIES LP., AND ISSUED IN STRICT CONFIDENCE. EXCEPT AS AUTHORIZED BY 3G SHIELDING SPECIALTIES IN WRITING, THESE DRAWINGS, LISTS OR SPECIFICATIONS SHALL NOT BE REPRODUCED, RETRANSMITTED, USED FOR THE DESIGN, MANUFACTURE OR SALE OF EQUIPMENT OR USED FOR ANY OTHER PURPOSE OTHER THAN EVALUATION

UNLESS OTHERWISE SPECIFIED
U/M INCHES
TOLERANCE ±0.005

ROHS COMPLIANCE 2011/65/EU

DATE 15-12-10

3G SHIELDING SPECIALTIES

PART NUMBER	REV.
PIC-S-203F	0

DESCRIPTION SHIELD FRAME

SCALE 1.5:1 | SHEET 1 OF 1