THIS DRAWING IS A CONTROLLED DOCUMENT

DRAWING NO AU34791

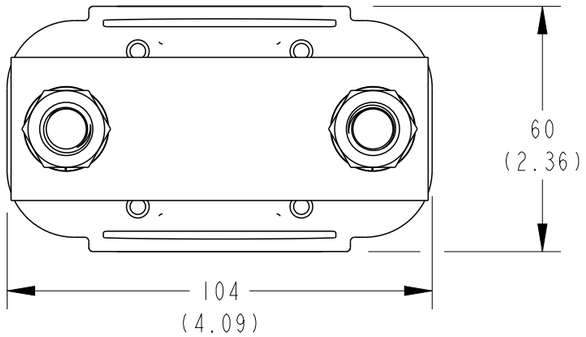

PART NO.	CATALOGUE NO.
EF8412-000	CC38-50-SN-M12-DOUB

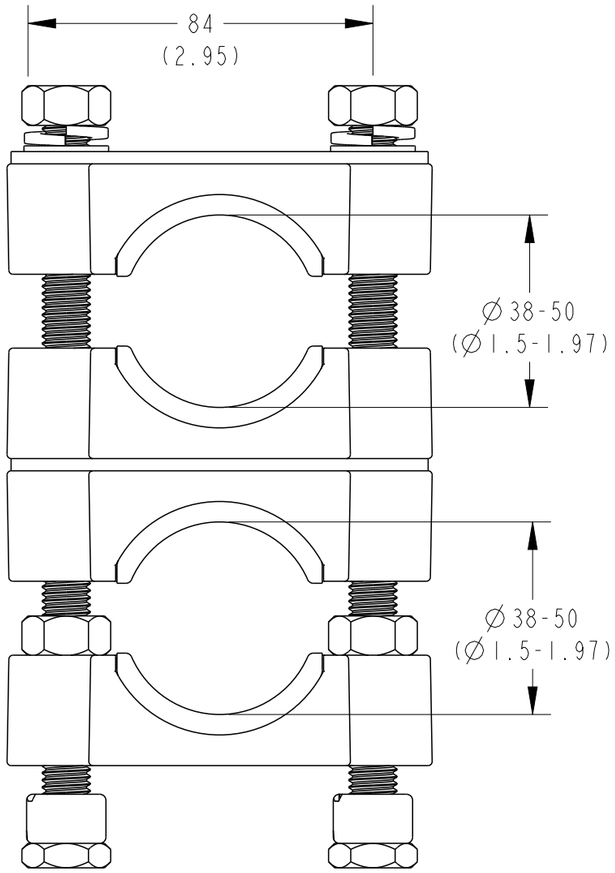

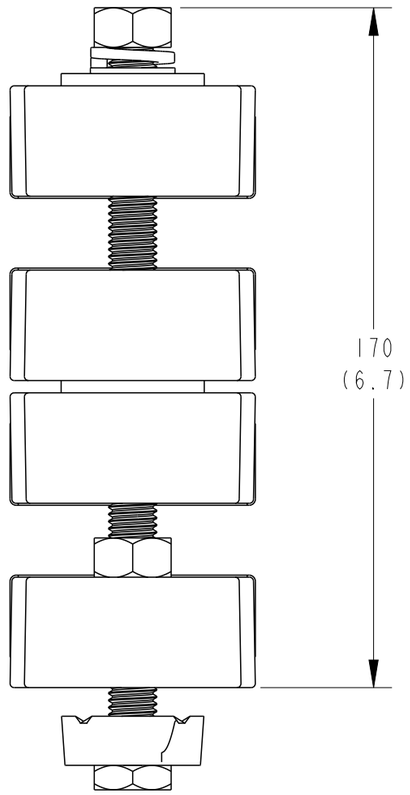

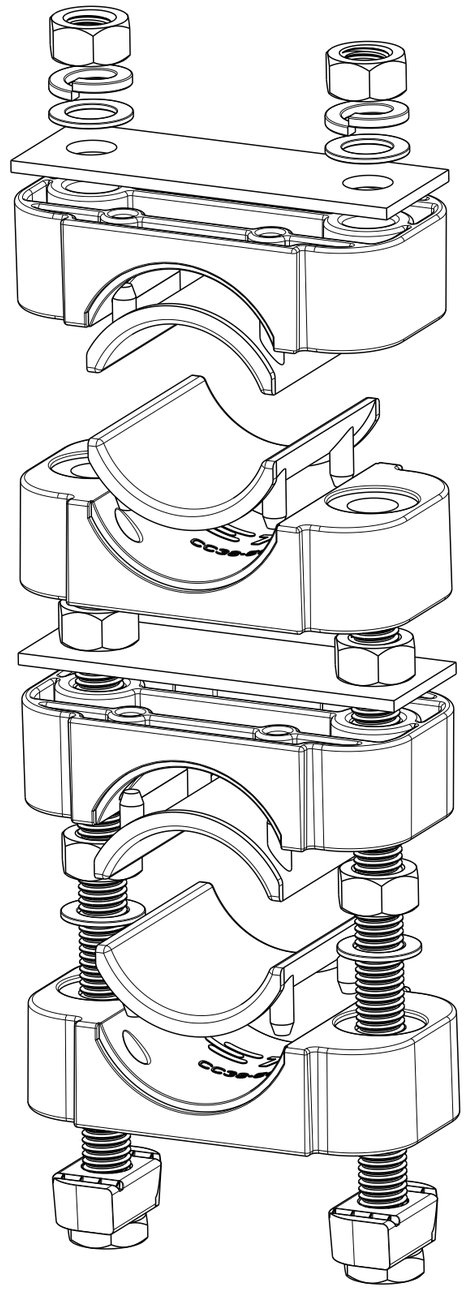

THIS INFORMATION IS CONFIDENTIAL AND PROPRIETARY TO TE CONNECTIVITY CORPORATION AND ITS WORLDWIDE SUBSIDIARIES AND AFFILIATES. IT MAY NOT BE DISCLOSED TO ANYONE, OTHER THAN TE CONNECTIVITY PERSONNEL, WITHOUT WRITTEN AUTHORIZATION FROM TE CONNECTIVITY CORPORATION, AUSTRALIA.

	POS	REV	REVISION RECORD	DATE	DWN	APVD
LOC						
	—	2	CLEAT MOULDING CONFIGURATION MODIFIED TO 2x TOPS AND 2x BOTTOM MOULDINGS	1/2/2017	DG	AT
DIST	—	1	NEW RELEASE	15-10-2016	RN	AT

IMPLIED NOTES
BURRS AND SHARP EDGES REMOVED
SCREW THREADS ARE TO AS 1275
DO NOT WORK TO DIMS MARKED REF
SURFACE FINISH 6.3 U.N.O.
DIMS ARE IN mm. DO NOT SCALE

IMPLIED TOLERANCES
HOLE DIA AND LOCATIONS..±0.5mm
DIMENSIONS UP TO 30mm...±1.5mm
DIMENSIONS OVER 30mm...±5%
UP TO A MAX OF.....±5mm
ANGULAR DIMENSIONS.....±5°

TCPN EF8412-000
PART Alias UTX/DUL CC38-50-SN-M12-DOUB
Cat No CC38-50-SN-M12-DOUB

MATERIAL DESC -
MATERIAL NO -
MATL SPEC/STD/DRG NO -
PROCESS SPEC HEAT TREAT/PLATING NO

TITLE
CABLE CLEAT Ø38-Ø50
M12 STRUT NUT TYPE DOUBLE

DRAWN RN | DATE 15-10-2016
CHECKED DG | APPROVED AT

TE Connectivity
2/3 Corella Close
Berkeley Vale NSW 2261 Australia

SIZE A3 | PROJECTION 3RD ANGLE | SCALE 2:3 | DRAWING NO AU34791 | SHEET 1 OF 1 | REV 2

Format: generic_ma3_au_rl.frm
Template: tec_generic_a3_metric_au_rl.drw
Dwg No from Pt Mod Fam Tbl: AU29454