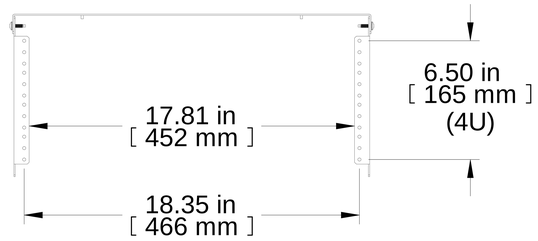

TOP VIEW
(TOP MTG)

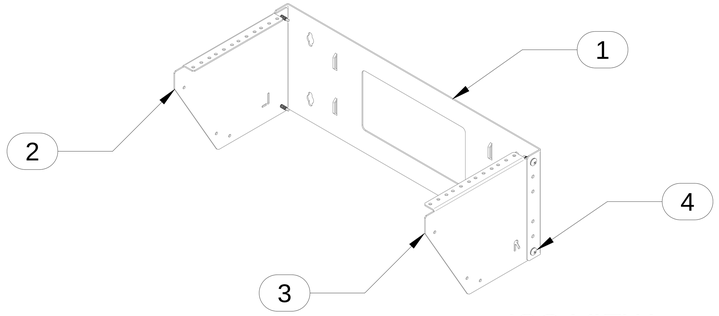

ISO VIEW
(TOP MTG)

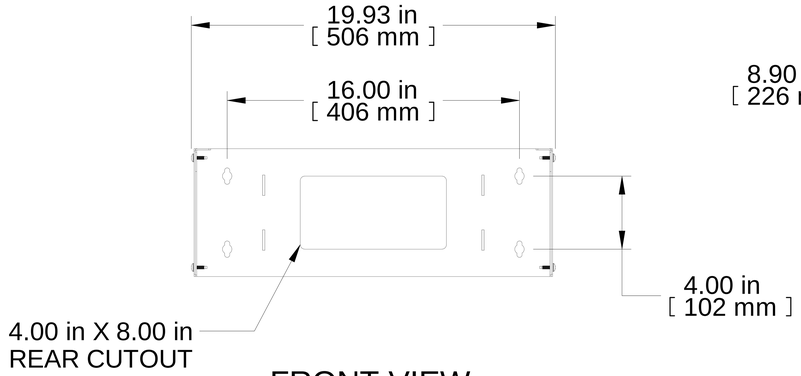

FRONT VIEW
(TOP MTG)

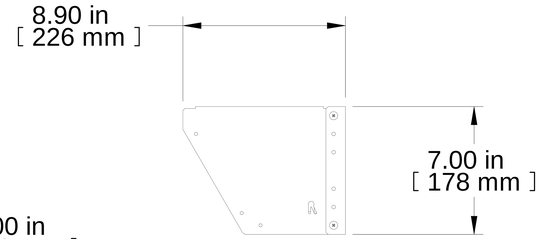

R.S. VIEW
(TOP MTG)

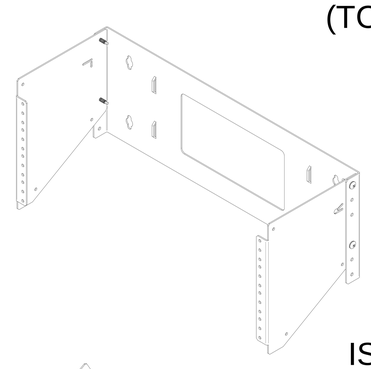

ISO VIEW
(FRONT MTG)

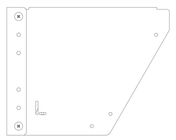

L.S. VIEW
(TOP MTG)

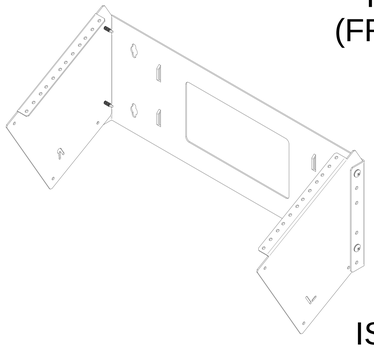

ISO VIEW
(ANGLED MTG)

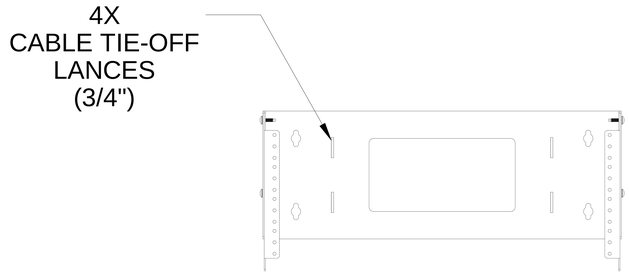

FRONT VIEW
(FRONT MTG)

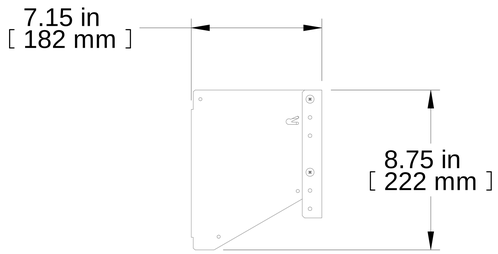

R.S. VIEW
(FRONT MTG)

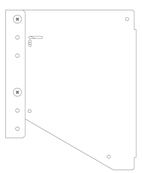

L.S. VIEW
(FRONT MTG)

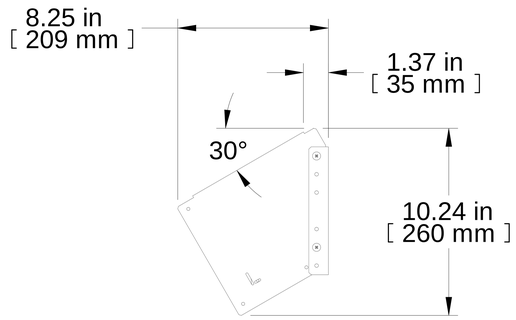

R.S. VIEW
(ANGLED MTG)

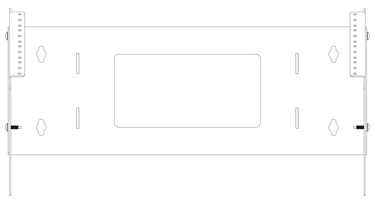

FRONT VIEW
(ANGLED MTG)

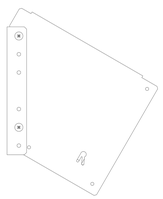

L.S. VIEW
(ANGLED MTG)

Item Number	Title	Quantity
1	VWR 4U WALL BRKT	1
2	HLP - FIXED RAIL LH 90/30 (4U)	1
3	HLP - FIXED RAIL RH 90/30 (4U)	1
4	10-32 X 3/4 QUADREX TRUSS PH	4

PART NUMBERS

VWR4UWH	PAINTED WHITE SMOOTH

NOTES

Variable Position Mounting Wall Rack
Includes SCREW1032-25 (4x Used to Assemble Product)
See Hammond Website for More Accessories

Français

Pour tous les détails sur nos produits,
svp veuillez consulter notre site www.hammondmfg.com

Data subject to change without notice. Isometric drawing not to scale.
Les données sont sujettes à changement sans préavis.

HAMMOND MANUFACTURING®

www.hammondmfg.com

PART NO. **VWR4UWH**