DRAWING MADE IN THIRD ANGLE PROJECTION

/home/us016926/DMTECmod

PART NUMBER	REV	FIRST USED
680580-1	D	122500-1
680580-2	D	565435-5
680580-3	D	354500-1

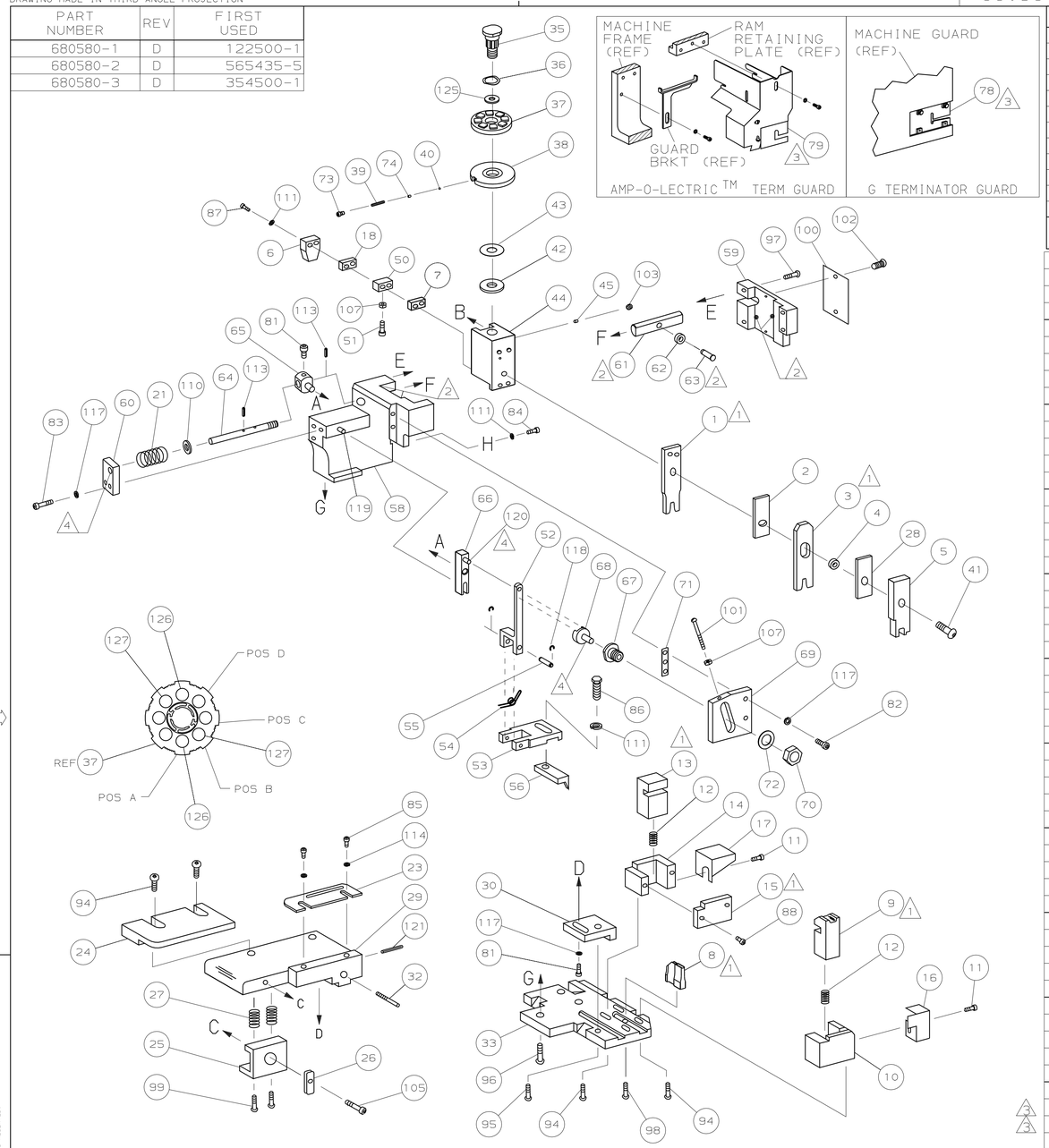

TERMINAL NAME: INTERLOCK			(COMP TERMINAL-AMP SPEC)			
		286685-1	CRIMPING DATA			
		286685-2	PAD LTR	CRIMP HEIGHT	WIRE SIZE	
AMP P/N	MFG P/N		A	.076 ±.002 [1.93 ±0.05mm]	14 or 2mm²	
286685-1	JG1427-42		B	.066 ±.002 [1.68 ±0.05mm]	16 or 1.5mm²	
	FRAMATONE		C	NOT	USED	
			D	NOT	USED	
286685-2	913043.RA000		CRIMP	SIZE	TYPE	RANGE
	INTEX		WIRE	.100 [2.54mm]	F	16-14
			INSUL	.140 [3.56mm]	O	ø.083-.122

WIRE STRIP LENGTH	TERM APPL SPEC	FEED	APPL INSTRUCTION	SET UP GAGE	LAYOUT
.203-.234	NONE	.880	408-8040	458637-1	L2035

-3	-2	-1	U/M	DWG SIZE	PART NO	DESCRIPTION	ITEM NO
							129
							128
2	2	2	-	C	354779-5	PIN, WIRE DISC (.3015)B	127
2	2	2	-	C	8-354778-3	PIN, WIRE DISC (.2910)A	126
1	1	1	-	A	986950-1	WASHER, FLAT PRECISION	125
1	1	1	-	A	217238-1	GENERAL INSTRUCTION PACKAGE	124
1	1	1	-	-	4088040	SF APPL INST 408-8040	123
							122
1	1	1	-	A	4-21028-0	PIN,SLT SPR(ø.093x.75)ST GDE PL	121
1	1	1	-	A	1-21030-1	PIN,DOWEL(ø.187x.50)LEVER	120
1	1	1	-	A	1-21030-6	PIN,DOWEL(ø.187x1.25)HOUSING	119
2	2	2	-	A	21045-3	RING,RET "C"(ø.187)FD FING PIN	118
5	5	5	-	A	21024-5	WASHER, LOCK(#10)ADJ BLOCK	117
							116
							115
2	2	2	-	A	21024-2	WASHER,LOCK(#4)FRONT STP GUIDE	114
2	2	2	-	A	5-21028-1	PIN,SLT SPR(ø.125x.50)ADJ ROD	113
							112
4	4	4	-	A	21024-4	WASHER,LOCK(#8)STRIPPER	111
1	1	1	-	A	21899-4	WASHER,FLAT(ø5/16)SCREW ADJ	110
							109
							108
1	2	2	-	A	21018-5	NUT,HEX(6-32)FEED ADJ	107
							106
1	1	1	-	A	22353-8	SCR,SHLD(ø.187x.25)DRAG LEVER	105
1	1	-	-	A	992031-1	PIN, CLEVIS	104
1	1	1	-	A	21009-2	SCR,SKT SET(1/4-20x.25 LW)RAM	103
2	2	2	-	A	21017-2	SCR,DRIVE(#2x.19)ID PLATE	102
1	1	1	-	A	6-23715-5	SCR,PAN HD(6-32x1.50)FEED ADJ	101
1	1	1	-	B	461264-1	PLATE, IDENTIFICATION	100
2	2	2	-	A	3-21002-0	SCR,BHC(10-32x.88)DRAG	99
1	1	1	-	A	22733-8	SCR,BHC(8-32x.38 LW)ANVIL	98
2	2	2	-	A	2-21002-9	SCR,BHC(10-32x.75)CAP	97
3	3	3	-	A	2-22733-8	SCR,BHC(1/4-20x.62)HOUSING	96
1	1	1	-	A	2-21002-7	SCR,BHC(10-32x.50)SG ADJ BLOCK	95
6	6	6	-	A	2-21002-2	SCR,BHC(8-32x.50)TERM H DWN	94
							93
							92
1	1	1	-	A	1-21002-7	SCR,BHC(6-32x.38)CAM	91
							90
1	1	-	-	A	7-21000-9	SCR,SHC(4-40x.19)STRIPPER	89
2	2	2	-	A	1-21000-8	SCR,SHC(6-32x.25)R SHEAR PLATE	88
2	2	2	-	A	8-21002-9	SCR,BHC(8-32x1.00)	87
1	1	1	-	A	2-22603-0	SCR,HEX HD(8-32x.31)FEED FINGER	86
2	2	2	-	A	1-21000-3	SCR,SHC(4-40x.25)F ST GUIDE	85
1	1	1	-	A	2-21000-7	SCR,SHC(8-32x.50)STRIPPER	84
2	2	2	-	A	3-21000-7	SCR,SHC(10-32x.75)FEED ROD GD	83
2	2	2	-	A	3-21000-6	SCR,SHC(10-32x.62)FEED ADJ BLK	82
2	2	2	-	A	3-21000-4	SCR,SHC(10-32x.38)SG ADJ BL	81
							80
-	REF	-	-	B	455749-1	GUARD, WINDOW	79
REF	-	-	-	B	679532-1	INSERT, GUARD	78
							77
							76
							75
1	1	1	-	A	690603-1	SPRING, ASSIST	74
1	1	1	-	A	23030-1	SCR,SHC(6-32x.25 SL)INS DISC	73
1	1	1	-	A	458109-1	WASHER, SPECIAL	72
1	1	1	-	A	690517-1	SPACER	71

QTY REQD PER ASSY — PARTS LIST

-1	-2	-3			
LEADMAKER	BENCH MODEL K	BENCH MODEL G	MECH POST FEED	MECH PRE FEED	MECH PRE FEED

-3	-2	-1	U/M	DWG SIZE	PART NO	DESCRIPTION	ITEM NO
1	1	1	-	B	22594-8	NUT,HEX(1/2-20)	70
1	1	1	-	B	240628-1	PLATE, ADJUSTMENT	69
1	1	1	-	B	240626-1	SHAFT, PIVOT	68
1	1	1	-	B	240633-1	BUSHING	67
1	1	1	-	A	455680-1	LEVER, INTERMEDIATE	66
1	1	1	-	B	240629-1	BLOCK, PIVOT	65
1	1	1	-	A	240632-2	SCREW, ADJ FEED ROD	64
1	1	1	-	B	240659-3	PIN, CAM ROLLER	63
1	1	1	-	B	240658-1	ROLLER, CAM	62
1	1	1	-	B	454398-2	ROD, FEED	61
1	1	1	-	A	454178-1	GUIDE, FEED ROD	60
1	1	1	-	C	454220-1	CAP, RAM	59
1	1	1	-	D	454485-1	HOUSING	58
							57
1	1	1	-	B	458537-2	PAWL, FEED	56
1	1	1	-	B	240624-1	PIN, FEED FINGER	55
1	1	1	-	B	691499-1	SPRING, FEED FINGER	54
1	1	1	-	A	690541-1	HOLDER, FEED FINGER	53
1	1	1	-	B	455679-1	LEVER, TERMINAL FEED ARM	52
1	1	1	-	A	811242-2	BUMPER, HOLDDOWN	51
1	1	1	-	A	690753-1	SPACER, TONKER	50
1	-	-	-	B	690602-6	CAM, PRE-FEED 1 5/8 ST	49
-	1	-	-	B	690602-5	CAM, PRE-FEED 1 1/8 ST	48
-	-	1	-	B	690501-4	CAM, POST-FEED 1 5/8 ST	47
							46
1	1	1	-	A	690191-1	PLUG, NYLON	45
1	1	1	-	C	455673-1	RAM	44
1	1	1	-	A	690125-1	WASHER, LAMINATED	43
1	1	1	-	A	690124-1	WASHER, RAM	42
1	1	1	-	A	7-21002-9	BOLT, CRIMPER(5/16x1.00)	41
1	1	1	-	A	23241-6	BALL, STEEL	40
1	1	1	-	A	690170-1	SPRING, COMPRESSION	39
1	1	1	-	C	690142-1	DISC, INSULATION	38
1	1	1	-	D	354777-1	WIRE DISC, PLASTIC	37
1	1	1	-	A	22480-5	WASHER, SPRING	36
1	1	1	-	B	690212-1	POST, RAM	35
							34
1	1	1	-	D	455675-9	PLATE, BASE	33
1	1	1	-	A	690432-3	SCREW, ADJUSTMENT	32
							31
1	1	1	-	B	455689-1	BLOCK, STRIP GUIDE ADJ	30
1	1	1	-	C	458144-1	PLATE, STRIP GUIDE	29
1	1	1	-	C	2-455888-1	SPACER, FRONT SHEAR DEP	28
2	2	2	-	A	1-22284-0	SPRING, DRAG	27
1	1	1	-	B	240793-1	LEVER, DRAG RELEASE	26
1	1	1	-	B	240792-1	DRAG, TERMINAL	25
1	1	1	-	D	5-690504-8	GUIDE, STRIP (REAR)	24
1	1	1	-	A	693855-2	GUIDE, STRIP (FRONT)	23
-	-	1	-	B	690472-2	STRIPPER	22
1	1	1	-	A	4-22284-9	SPRING, FEED RETURN	21
1	1	-	-	A	679218-1	STRIPPER WIRE STOP ASSY	20
1	1	-	-	B	458949-1	STRIPPER	19
1	1	1	-	C	3-240641-7	SPACER, DEPRESSOR (REAR)	18
1	1	1	-	A	691668-1	GUARD, CHIP (REAR)	17
1	1	1	-	B	318563-1	GUARD, CHIP, FRONT	16
1	1	1	-	B	459164-1	PLATE, SHEAR (REAR)	15
1	1	1	-	B	690462-1	HOLDER, SHEAR (REAR)	14
1	1	1	-	C	690463-1	SHEAR, FLOAT (REAR)	13
2	2	2	-	A	5-22280-0	SPRING, SHEAR	12
2	2	2	-	B	690461-1	STOP, SHEAR	11
1	1	1	-	C	690459-1	HOLDER, SHEAR (FRONT)	10
1	1	1	-	C	454276-1	SHEAR, FLOAT (FRONT)	9
1	1	1	-	C	662188-7	ANVIL	8
1	1	1	-	C	1-240641-8	SPACER, DEPRESSOR (REAR)	7
1	1	1	-	A	1-690468-1	DEPRESSOR, SHEAR (REAR)	6
1	1	1	-	C	1-455889-4	DEPRESSOR, SHEAR (FRONT)	5
1	1	1	-	B	238011-4	SPACER, BLOCK CRIMPER	4
1	1	1	-	C	1-456135-8	CRIMPER, INSULATION	3
1	1	1	-	C	455888-5	SPACER, CRIMPER	2
1	1	1	-	C	456407-4	CRIMPER, WIRE	1

REVISION OF EACH ASSY NO (WHEN BLANK, USE DWG REVISION)

QTY REQD PER ASSY — PARTS LIST

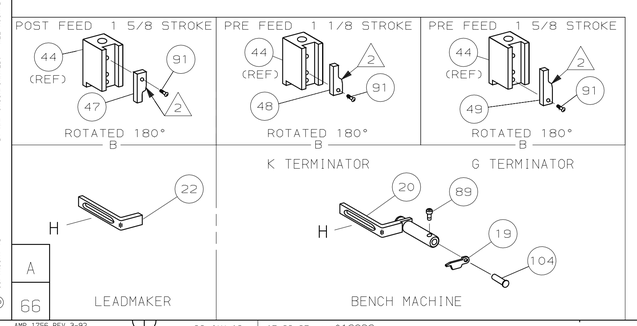

1. RECOMMENDED SPARE PARTS.
2. GREASE LIGHTLY.
3. GUARD MUST BE IN PLACE WHEN OPERATING APPLICATOR IN A BENCH MACHINE.
4. LUBRICATE DAILY USING NO. 20 MACHINE OIL.

P	F	LTR	REVISION RECORD	APP	DATE
		D	ECR-06-002078	TE	1-06
		C1	ECR 05-013236	TE	10-05
		C	ECR 05-012011	GB	9-05
		B1	ECN 0150-0459-04	TE	4-04
		B	0150-9584-99	TE	SEP99
		A	REVISED	CE	3-98

DIMENSIONS IN INCHES. DO NOT SCALE PRINT. TOLERANCES UNLESS OTHERWISE SPECIFIED: 2 PLC DEC ±- 3 PLC DEC ±- 4 PLC DEC ±- ANGLES ±- SURF TEXTURE: √ REMOVE BURRS, BREAK SHARP EDGES R.015 MAX

MATL – HT TR – FIN –

DR W.HOOVER 3-10-98 APP T.ELBIN 3-10-98 CHK C.ERISMAN 3-10-98 REL –

AMP Incorporated Harrisburg, PA 17105-3608

NAME SIDE FEED HDM APPLICATOR MACHINE REF MINI APPL

SCALE – D DWG NO 680580 SHEET 1 OF 1 REV D

CAGE CODE 00779 CUSTOMER AND ASSEMBLY DRAWING RESTRICTED TO

THIS DRAWING IS A CONTROLLED DOCUMENT.
THIS DRAWING IS UNPUBLISHED. © COPYRIGHT 19 . RELEASED FOR PUBLICATION . 19 . BY AMP INCORPORATED. ALL RIGHTS RESERVED.