THIS DRAWING IS UNPUBLISHED. RELEASED FOR PUBLICATION 1997
© COPYRIGHT 1997 BY - ALL RIGHTS RESERVED.

REVISIONS					
P	LTR	DESCRIPTION	DATE	DWN	APVD
	B6	REVISED PER ECR-17-014011	18JAN2018	SRG	MKD

PN 1-1

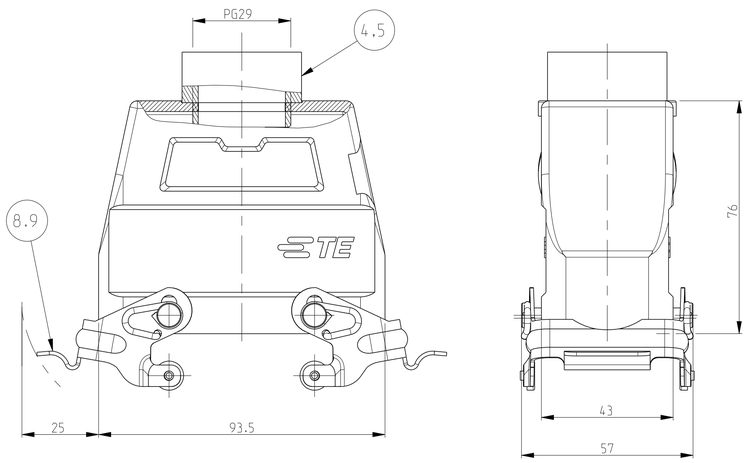

PN 1-6 & 7-6

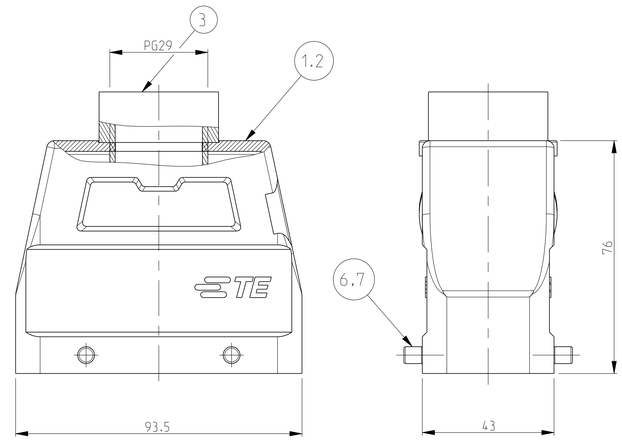

PN 1-7

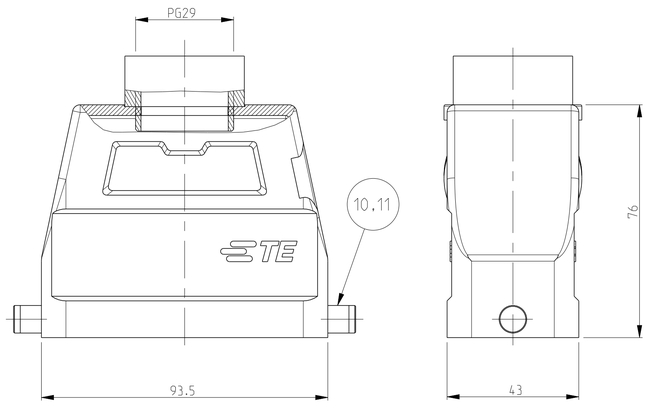

NOTES

1 Material: Housing: aluminium diecasting alloy

2 Surface:- Powder varnish :grey
:Black

3 Varnish on the inside not necessary

4 Packaging
quantity: 5 pieces

PN 1-7

SCALE 1:2

PN 1-1

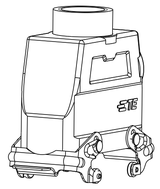

SCALE 1:2

PN 1-6 & 7-6

SCALE 1:2

2-7	1-7	2-1	1-1	2-6	7-6	1-6	DESCRIPTION	MATERIAL	SURFACE	COLOR	ITEM NO	NOTES
OBSOLETE	OBSOLETE	OBSOLETE		OBSOLETE	OBSOLETE	OBSOLETE						
2							LB-clip bolt	Stainless steel	-	-	11	-
	2						LB-clip bolt	Steel	Zinc plated	Blue	10	-
		2					VS-side clip	Stainless steel	-	-	9	-
			2				VS-side clip	Steel	Zinc plated	Blue	8	-
				4			VS-Clip bolt	Stainless steel	-	-	7	-
					4	4	VS-Clip bolt	Steel	Zinc plated	Blue	6	-
1		1		1			O Ring Pg29	Neoprene	-	Black	5	-
1		1		1			Adapter 6kt Pg29	Brass	Nickel plated	-	4	-
	1		1		1	1	Adapter Pg29	Brass	Nickel plated	-	3	-
1		1		1	1		Hood HD.40.Pg.1.29	Aluminium	-	Black	2	-
	1		1			1	Hood HD.40.Pg.1.29	Aluminium	-	Grey	1	-

ORDERING TEXT

~~HD.40.Sto 1.29.Z~~

~~HD.40.Sto 1.29.Z.So~~

~~HD K40.Sto 1.29.Z~~

HD.40.Sto-VS.1.29.Z

~~HD K40.Sto VS.1.29.Z~~

~~HD.40.Sto-GR.1.29.Z~~

~~HD K40.Sto GR.1.29.Z~~

THIS DRAWING IS A CONTROLLED DOCUMENT.

DIMENSIONS: mm

TOLERANCES UNLESS OTHERWISE SPECIFIED:
ANGULAR ±0°30'
ACCORDING ISO 2768-mK.
ACCORDING DIN 7168-GS
0 PLC ±
1 PLC ±
2 PLC ±
3 PLC ±
4 PLC ±
DECIMALS ±

MATERIAL

FINISH

DWN	Graf	12.11.1997
CHK	Kramer	23.06.98
APVD	-	
PRODUCT SPEC	-	
APPLICATION SPEC	-	
WEIGHT	-	

TE Connectivity

NAME: HOOD HD.40
HD.40.STO.1.29.Z

SIZE	CAGE CODE	DRAWING NO	RESTRICTED TO
A1	00779	C-1102572	

CUSTOMER DRAWING

SCALE	SHEET	OF	REV
1:1	1	1	B6

4805 (3/13)