MODEL NO.	PACKAGING
134-1000-006	ONE PCS PER BAG

REV	ECO	DATE
001	ECO-17-0032	11/28/2017
002	ECO-18-0020	08/21/2018

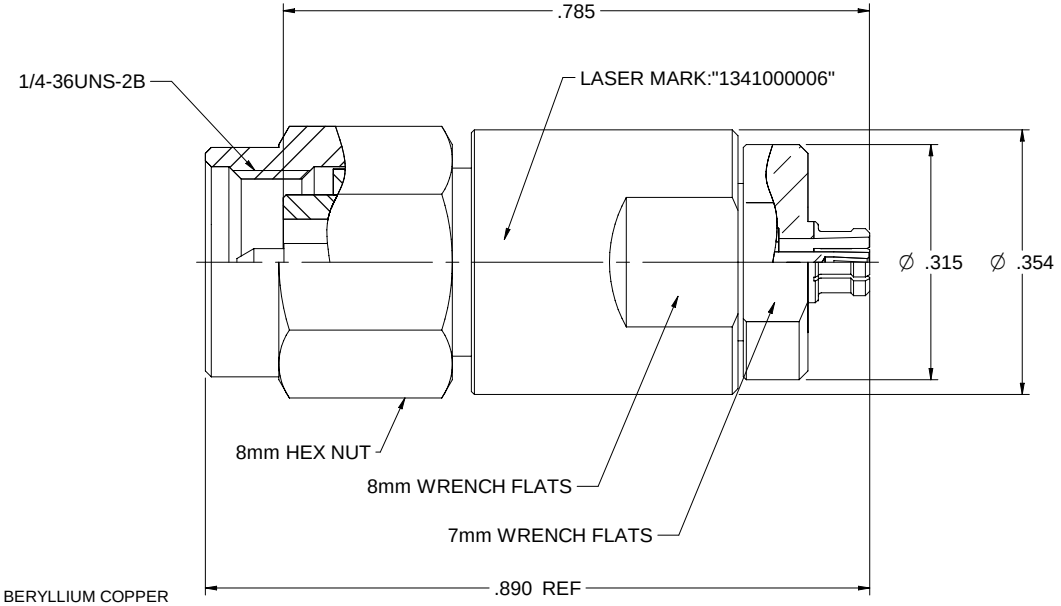

NOTES: UNLESS OTHERWISE SPECIFIED

1. MATERIAL & FINISH:
   1.1 BODY& SHELL: PASSIVATED STAINLESS STEEL
   1.2 CONTACT PIN& CONTACT BODY: GOLD PLATED BERYLLIUM COPPER
   1.3 INSULATOR1: ULTEM1000 AMBER
   1.4 INSULATOR2: PTFE WHITE
   1.5 C RING: BERYLLIUM COPPER
   1.6 GASKET: SILICONE RED

2. ELECTRICAL:
   2.1 IMPEDANCE: 50 OHMS
   2.2 FREQUENCY RANGE: DC-40 GHz
   2.3 VOLTAGE STANDING WAVE RATIO: 1.3 MAX
   2.4 DIELECTRIC WITHSTANDING VOLTAGE: 325 VRMS MIN
   2.5 CONTACT RESISTANCE:
      2.5.1 CENTER CONTACT: 6 MILLIOHM MAX
      2.5.2 OUTER CONTACT: 2 MILLIOHM MAX
   2.6 INSULATOR RESISTANCE: 5000 MEGOHM MIN

3. MECHANICAL:
   3.1 ENGAGEMENT FORCE: 0.23 NM MAX (2.92MM)
      FULL DETENT 19 N MAX, SMOOTH BORE 11 N MAX (SMPM)
   3.2 DISENGAGEMENT FORCE: 0.23 NM MAX (2.92MM)
      FULL DETENT 29 N MAX, SMOOTH BORE 11N MAX (SMPM)
   3.3 COUPLING PROOF TORQUE: 1.7 NM MIN.(2.92MM)
   3.4 COUPLING NUT RETENTION: 267N MIN
   3.5 CONTACT RETENTION: 22 N MIN
   3.6 DURABILITY: 500 CYCLES MIN (2.92MM)
      FULL DETENT 100 CYCLES MIN, SMOOTH BORE 500 CYCLES MIN (SMPM)

4. ENVIRONMENT:
   4.1 THERMAL SHOCK: MIL-STD-202, METHOD 107, CONDITION B.
   4.2 OPERATING TEMPERATURE: -65 TO 165°C
   4.3 SHOCK: MIL-STD-202, METHOD 213, CONDITION I
   4.4 VIBRATION: MIL-STD-202, METHOD 204, CONDITION D
   4.5 MOISTURE RESISTANCE: MIL-STD-202, METHOD 106

cinch connectivity solutions
This PROPRIETARY Document is property of Cinch Connectivity Solutions. Unauthorized use, disclosure, or reproduction of this document is prohibited without understanding that it is not intended to represent an offer to sell or license any product. Patent Pending
INTERPRETATION OF DRAWINGS IN ACCORDANCE WITH ASME Y14.5-2009

Model No. 134-1000-006	Cage Code	Johnson	
RoHS2 ☑ 2011/65/EU	3RD ANGLE PROJECTION	Title: ADAPTER ASSEMBLY,2.92mm(SMK) PLUG TO SMPM JACK	
UNLESS OTHERWISE SPECIFIED DIMS: INCH	Drawn By: Betty.Yu	Drawing No. 134-1000-006	Rev. 002
.XXX ±.02 .XXXX ±.01 ANGLES ±5°	Date 08/21/2018	Size C / DO NOT SCALE DRAWING / Workmanship Std NONE	Sheet 1 of 1