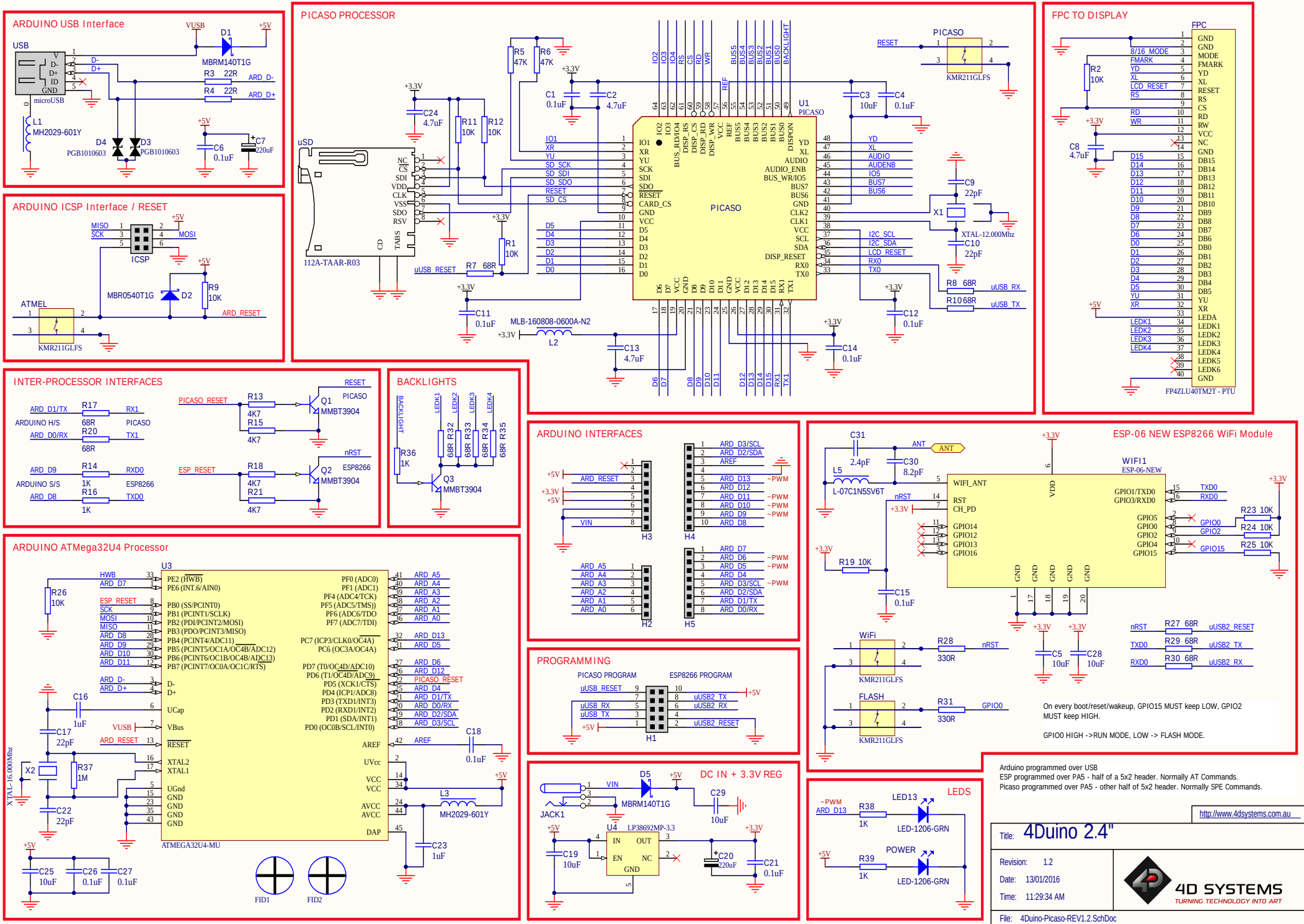
ARDUINO USB Interface
USB
microUSB
VUSB
D1
MBRM140T1G
+5V
D-
D+
R3 22R
R4 22R
ARD_D-
ARD_D+
L1
MH2029-601Y
D4
PGB1010603
D3
PGB1010603
C6
0.1uF
C7
220uF
ARDUINO ICSP Interface / RESET
MISO
SCK
MOSI
ICSP
MBR0540T1G
D2
R9
10K
ARD_RESET
ATMEL
KMR211GLFS
PICASO PROCESSOR
uSD
112A-TAAR-R03
NC
CS
SDI
VDD
CLK
VSS
SDO
RSV
CD
TABS
R5
47K
R6
47K
C1
0.1uF
C2
4.7uF
C24
4.7uF
R11
10K
R12
10K
R1
10K
uUSB_RESET
R7 68R
C11
0.1uF
MLB-160808-0600A-N2
L2
C13
4.7uF
U1
PICASO
IO1
XR
YU
SD_SCK
SD_SDI
SD_SDO
RESET
SD_CS
CARD_CS
GND
VCC
D5
D4
D3
D2
D1
D0
YD
XL
AUDIO
AUDIO_ENB
BUS_WR/IO5
BUS7
BUS6
CLK2
CLK1
SCL
SDA
DISP_RESET
RX0
TX0
I2C_SCL
I2C_SDA
LCD_RESET
C3
10uF
C4
0.1uF
C9
22pF
X1
XTAL-12.000Mhz
C10
22pF
R8 68R
uUSB_RX
R10 68R
uUSB_TX
C12
0.1uF
C14
0.1uF
PICASO
KMR211GLFS
FPC TO DISPLAY
FPC
R2
10K
C8
4.7uF
8/16_MODE
FMARK
YD
XL
LCD_RESET
RS
RD
WR
D15
D14
D13
D12
D11
D10
D9
D8
D7
D6
D0
D1
D2
D3
D4
D5
YU
XR
LEDK1
LEDK2
LEDK3
LEDK4
GND
MODE
RESET
CS
RW
VCC
NC
DB15
DB14
DB13
DB12
DB11
DB10
DB9
DB8
DB7
DB6
DB0
DB1
DB2
DB3
DB4
DB5
LEDA
LEDK5
LEDK6
FP4ZLU40TM2T - PTU
INTER-PROCESSOR INTERFACES
ARD_D1/TX
ARDUINO H/S
ARD_D0/RX
R17
68R
R20
68R
RX1
TX1
PICASO
PICASO_RESET
R13
4K7
R15
4K7
Q1
MMBT3904
RESET
ARD_D9
ARDUINO S/S
ARD_D8
R14
1K
R16
1K
RXD0
TXD0
ESP8266
ESP_RESET
R18
4K7
R21
4K7
Q2
MMBT3904
nRST
BACKLIGHTS
BACKLIGHT
R36
1K
Q3
MMBT3904
LEDK1
LEDK2
LEDK3
LEDK4
R32
R33
R34
R35
68R
ARDUINO INTERFACES
ARD_RESET
VIN
H3
ARD_D3/SCL
ARD_D2/SDA
AREF
ARD_D13
ARD_D12
ARD_D11
ARD_D10
ARD_D9
ARD_D8
~PWM
H4
ARD_A5
ARD_A4
ARD_A3
ARD_A2
ARD_A1
ARD_A0
H2
ARD_D7
ARD_D6
ARD_D5
ARD_D4
ARD_D3/SCL
ARD_D2/SDA
ARD_D1/TX
ARD_D0/RX
H5
ESP-06 NEW ESP8266 WiFi Module
C31
2.4pF
C30
8.2pF
ANT
L5
L-07C1N5SV6T
WIFI1
ESP-06-NEW
WIFI_ANT
RST
CH_PD
GPIO14
GPIO12
GPIO13
GPIO16
GPIO1/TXD0
GPIO3/RXD0
GPIO5
GPIO0
GPIO2
GPIO4
GPIO15
VDD
GND
R23 10K
R24 10K
R25 10K
R19 10K
C15
0.1uF
WiFi
R28
330R
C5
10uF
C28
10uF
nRST
R27 68R
uUSB2_RESET
TXD0
R29 68R
uUSB2_TX
RXD0
R30 68R
uUSB2_RX
FLASH
R31
330R
GPIO0
On every boot/reset/wakeup, GPIO15 MUST keep LOW, GPIO2 MUST keep HIGH.
GPIO0 HIGH ->RUN MODE, LOW -> FLASH MODE.
ARDUINO ATMega32U4 Processor
U3
HWB
ARD_D7
ESP_RESET
SCK
MOSI
MISO
ARD_D8
ARD_D9
ARD_D10
ARD_D11
ARD_D-
ARD_D+
VUSB
ARD_RESET
PE2 (HWB)
PE6 (INT.6/AIN0)
PB0 (SS/PCINT0)
PB1 (PCINT1/SCLK)
PB2 (PDI/PCINT2/MOSI)
PB3 (PDO/PCINT3/MISO)
PB4 (PCINT4/ADC11)
PB5 (PCINT5/OC1A/OC4B/ADC12)
PB6 (PCINT6/OC1B/OC4B/ADC13)
PB7 (PCINT7/OC0A/OC1C/RTS)
D-
D+
UCap
VBus
RESET
XTAL2
XTAL1
UGnd
GND
PF0 (ADC0)
PF1 (ADC1)
PF4 (ADC4/TCK)
PF5 (ADC5/TMS))
PF6 (ADC6/TDO
PF7 (ADC7/TDI)
PC7 (ICP3/CLK0/OC4A)
PC6 (OC3A/OC4A)
PD7 (T0/OC4D/ADC10)
PD6 (T1/OC4D/ADC9)
PD5 (XCK1/CTS)
PD4 (ICP1/ADC8)
PD3 (TXD1/INT3)
PD2 (RXD1/INT2)
PD1 (SDA/INT1)
PD0 (OC0B/SCL/INT0)
AREF
UVcc
VCC
AVCC
DAP
ARD_A5
ARD_A4
ARD_A3
ARD_A2
ARD_A1
ARD_A0
ARD_D13
ARD_D5
ARD_D6
ARD_D12
PICASO_RESET
ARD_D4
ARD_D1/TX
ARD_D0/RX
ARD_D2/SDA
ARD_D3/SCL
C18
0.1uF
L3
MH2029-601Y
C23
1uF
C16
1uF
C17
22pF
C22
22pF
X2
XTAL-16.000MHz
R37
1M
R26
10K
C25
10uF
C26
0.1uF
C27
0.1uF
ATMEGA32U4-MU
FID1
FID2
PROGRAMMING
PICASO PROGRAM
ESP8266 PROGRAM
uUSB_RESET
uUSB_TX
uUSB2_TX
uUSB2_RX
uUSB2_RESET
H1
DC IN + 3.3V REG
JACK1
VIN
D5
MBRM140T1G
C29
10uF
U4
LP38692MP-3.3
IN
OUT
EN
NC
GND
C19
10uF
C20
220uF
C21
0.1uF
LEDS
~PWM
ARD_D13
R38
1K
LED13
LED-1206-GRN
R39
1K
POWER
LED-1206-GRN
Arduino programmed over USB
ESP programmed over PA5 - half of a 5x2 header. Normally AT Commands.
Picaso programmed over PA5 - other half of 5x2 header. Normally SPE Commands.
http://www.4dsystems.com.au
Title: 4Duino 2.4"
Revision: 1.2
Date: 13/01/2016
Time: 11:29:34 AM
4D SYSTEMS
TURNING TECHNOLOGY INTO ART
File: 4Duino-Picaso-REV1.2.SchDoc