THIS COPY IS PROVIDED ON A RESTRICTED BASIS AND IS NOT TO BE USED IN ANY WAY DETRIMENTAL TO THE INTERESTS OF PANDUIT CORP.

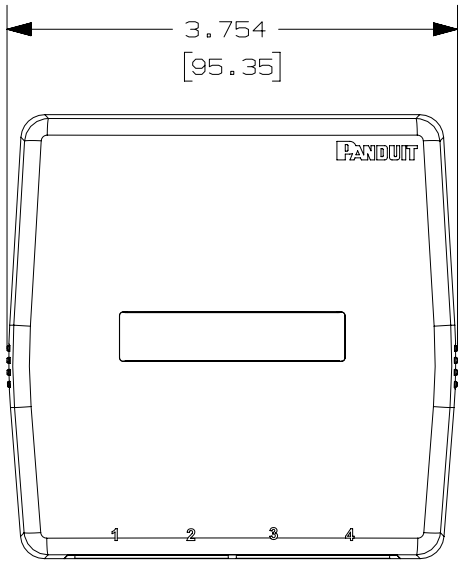

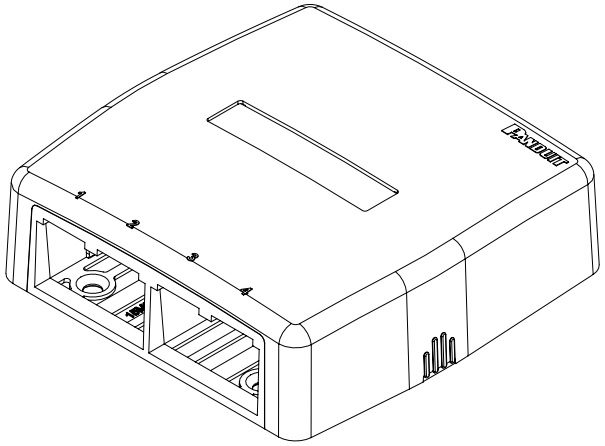

PANDUIT P/N	WEIGHT
CBXQ4**-A	.96 LB/10 PCS 437.5 g/10 PCS

NOTES:
1. SEE CURRENT CATALOG FOR ADDITIONAL PART NUMBER SUFFIXES TO INDICATE COLOR AND/OR PACKAGE QUANTITY.
2. SEE CATALOG FOR A COMPLETE LIST OF PARTS APPLICABLE FOR USE WITH THIS PART.
3. DIMENSIONS IN PARENTHESES ARE IN METRIC.
4. BREAKOUTS DESIGNED TO ACCEPT LD5/LDPH5 and LD10/LDPH10 RACEWAY.
5. INCLUDED WITH BOX KIT:
   a. (1) BOX COVER
   b. (1) BOX BASE
   c. (2) PLT1M PAN-TY
   d. (1) LABEL AND LABEL COVER
   e. (1) SCREW (USED TO SECURE COVER TO BASE)
   f. (2) STRIP OF 3.00: X .75" FOAM TAPE FOR MOUNTING

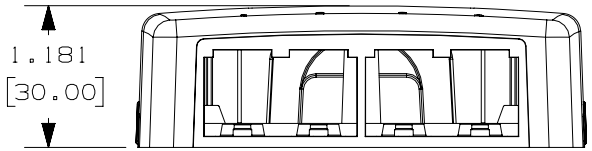

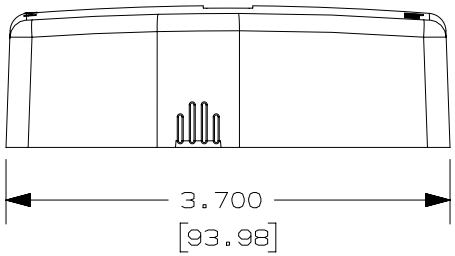

NO WARRANTY, EXPRESSED OR IMPLIED, IS MADE BY PANDUIT WITH RESPECT TO ADHESIVE BOND PERFORMANCE. AMONG OTHER THINGS, THE CONDITIONS UNDER WHICH THESE MOUNTS MAY BE APPLIED AND/OR THE SURFACE TO WHICH THEY MAY BE APPLIED ARE BEYOND PANDUIT'S CONTROL

PART NUMBER: SEE TABLE

TITLE: MINI-COM 4 PORT BOX w/ QUICK RELEASE COVER

CUSTOMER DRAWING

ITEM REVISION NAME: 15M583CV/08

DATASET FILE NAME: 15M583CV_DC10/08A

UNLESS OTHERWISE SPECIFIED, DIMENSIONAL TOLERANCES ARE: IN [mm]

.X ± .XXX ±

.XX ± ANGLES ±

THIRD ANGLE PROJECTION

MATERIAL:

DRAWING NUMBER: 15M583CV-10

DRAWN BY	DATE	CHK	SCALE		SIZE
TWV	7-19-16	JCO	NONE	SHT 1 OF 2	A

REV	DATE	BY	CHK	APR	DESCRIPTION	ECN
R	7-19-16	TWV	JCO	MMR	RELEASED TO PRODUCTION	15M583CV-10

D10100DA/14

THIS COPY IS PROVIDED ON A RESTRICTED BASIS AND IS NOT TO BE USED IN ANY WAY DETRIMENTAL TO THE INTERESTS OF PANDUIT CORP.

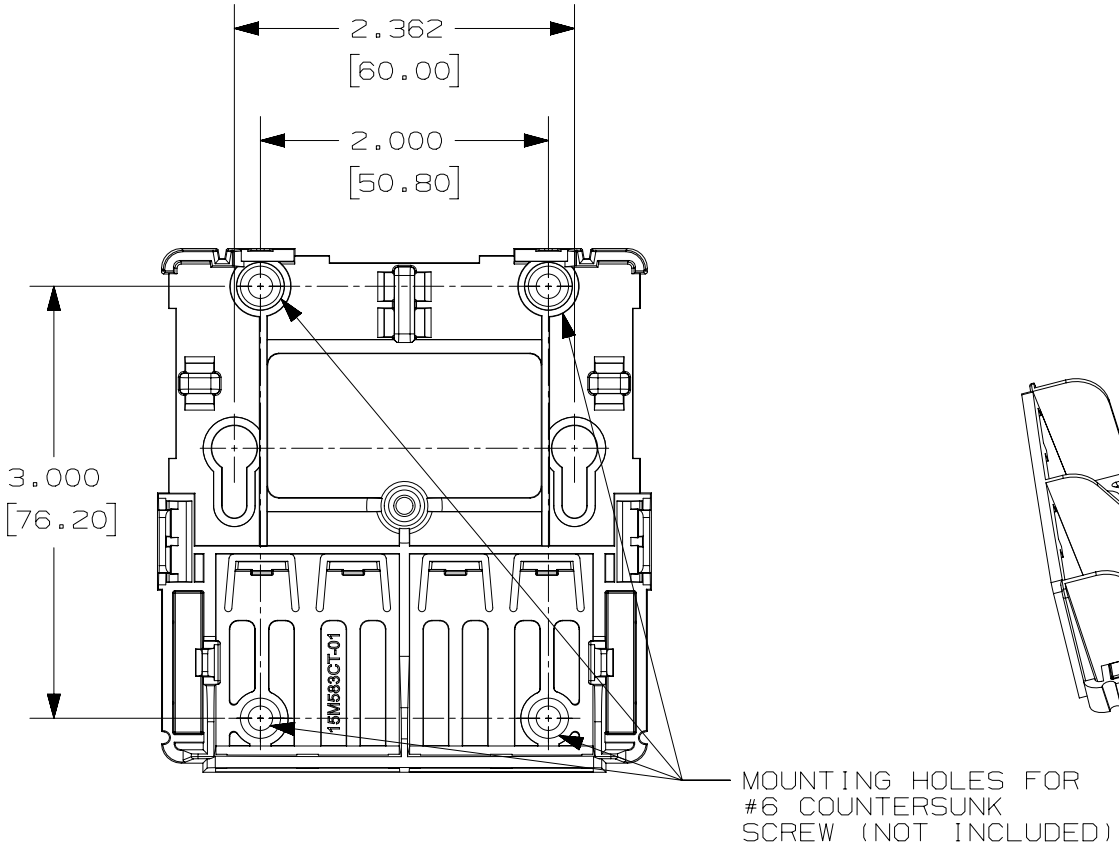

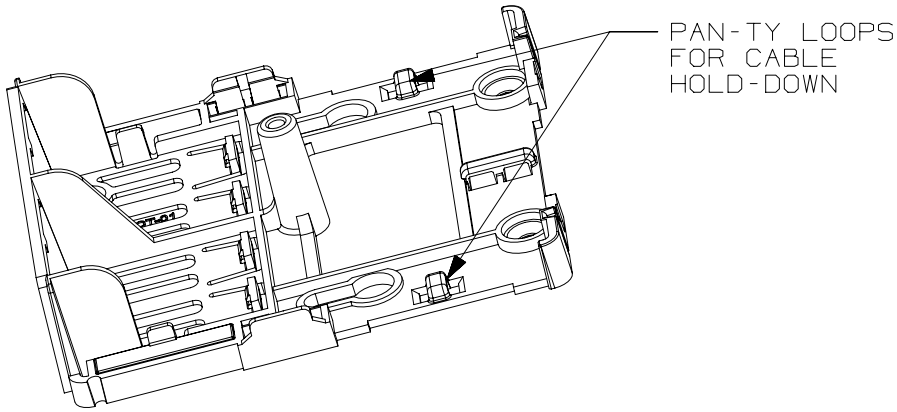

REV	DATE	BY	CHK	APR	DESCRIPTION	ECN
R	7-19-16	TWV	JCO	MMR	SEE SHEET 1 FOR REVISION HISTORY	15M583CV-10

PART NUMBER: SEE TABLE

TITLE: MINI-COM 4 PORT BOX w/ QUICK RELEASE COVER

CUSTOMER DRAWING

ITEM REVISION NAME: 15M583CV/08

DATASET FILE NAME: 15M583CV_DC10/08A

UNLESS OTHERWISE SPECIFIED, DIMENSIONAL TOLERANCES ARE: IN [mm]

.X ± .XXX ±

.XX ± ANGLES ±

THIRD ANGLE PROJECTION

MATERIAL: SEE NOTES

DRAWING NUMBER: 15M583CV-10

DRAWN BY	DATE	CHK	SCALE		SIZE
TWV	7-19-16	JCO	NONE	SHT 2 OF 2	A

D10100DA/14