TOLERANCE UNLESS OTHERWISE SPECIFIED	
.X	±0.25
.XX	±0.13
.XXX	±0.10

THIS IS A C.A.D. GENERATED DRAWING
DO NOT MAKE MANUAL REVISIONS TO MASTER.

ISSUE NUMBER	
ORIGINAL	1

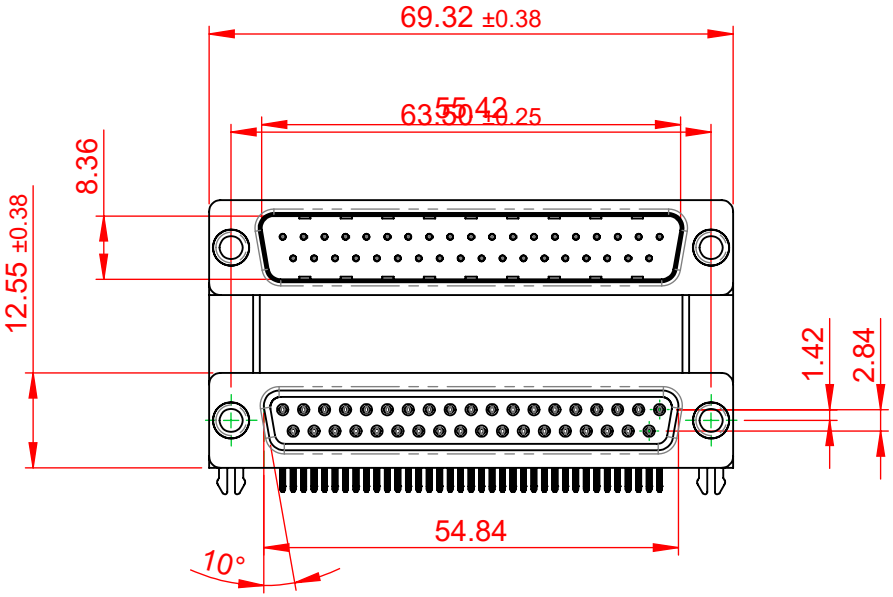

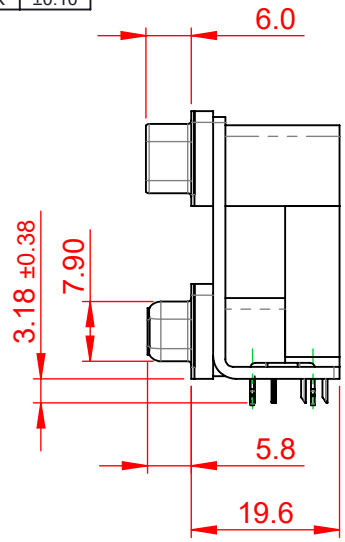

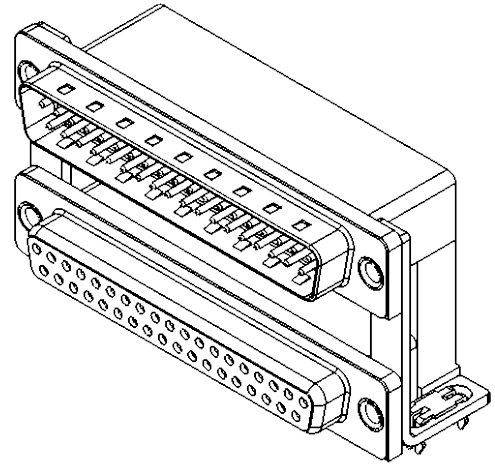

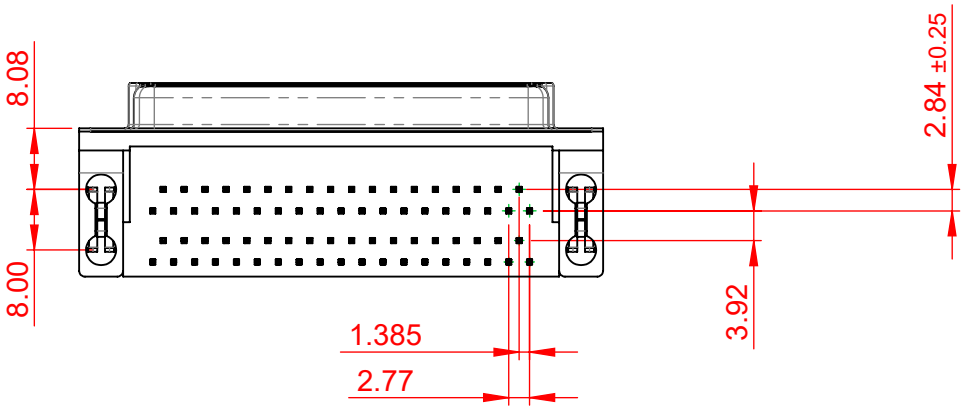

NOTES:

MATERIAL:
HOUSING: THERMOPLASTIC POLYESTER, UL94V-0, BLACK IN COLOUR
SHELL: STEEL, NICKEL PLATED
CONTACT: COPPER ALLOY, GOLD FLASH PLATING

OPERATING TEMPERATURE: -55°C ~ 85°C

CURRENT RATING: 3A PER CONTACT
CONTACT RESISTANCE: 25mΩ MAX.
INSULATOR RESISTANCE: 5000MΩ min.
DIELECTRIC WITHSTANDING VOLTAGE: 1000V AC rms

RoHS COMPLIANT

THIS SERIES FULLY CONFORMS TO THE EUROPEAN UNION DIRECTIVES 2011/65/EU FOR RoHS COMPLIANCY.

663 SERIES D-SUB CONNECTOR

SW REFERENCE NO.: 663 ASSEMBLY		
DRAWN: C.B	DATE: AUG. 01/2018	
CHECKED:	DATE:	
SCALE: (IN C.A.D. 1:1)	SHEET 1 OF 1	
DRAWING NUMBER: 663-037-264-030		ISSUE 1
PART NUMBER: 663-037-264-030		

EDAC INC
TORONTO, ONTARIO
CANADA
YOUR CONNECTION TO QUALITY & SERVICE

THESE DRAWINGS AND SPECIFICATIONS ARE THE PROPERTY OF EDAC INC.,AND SHALL NOT BE REPRODUCED,OR COPIED OR USED AS THE BASIS FOR THE MANUFACTURE OR SALE OF APPARATUS WITHOUT WRITTEN PERMISSION.