REVISION HISTORY				
ECO	REV	DESCRIPTION	APPROVED	DATE
—	2	PRODUCTION	JIM D.	05-16-11

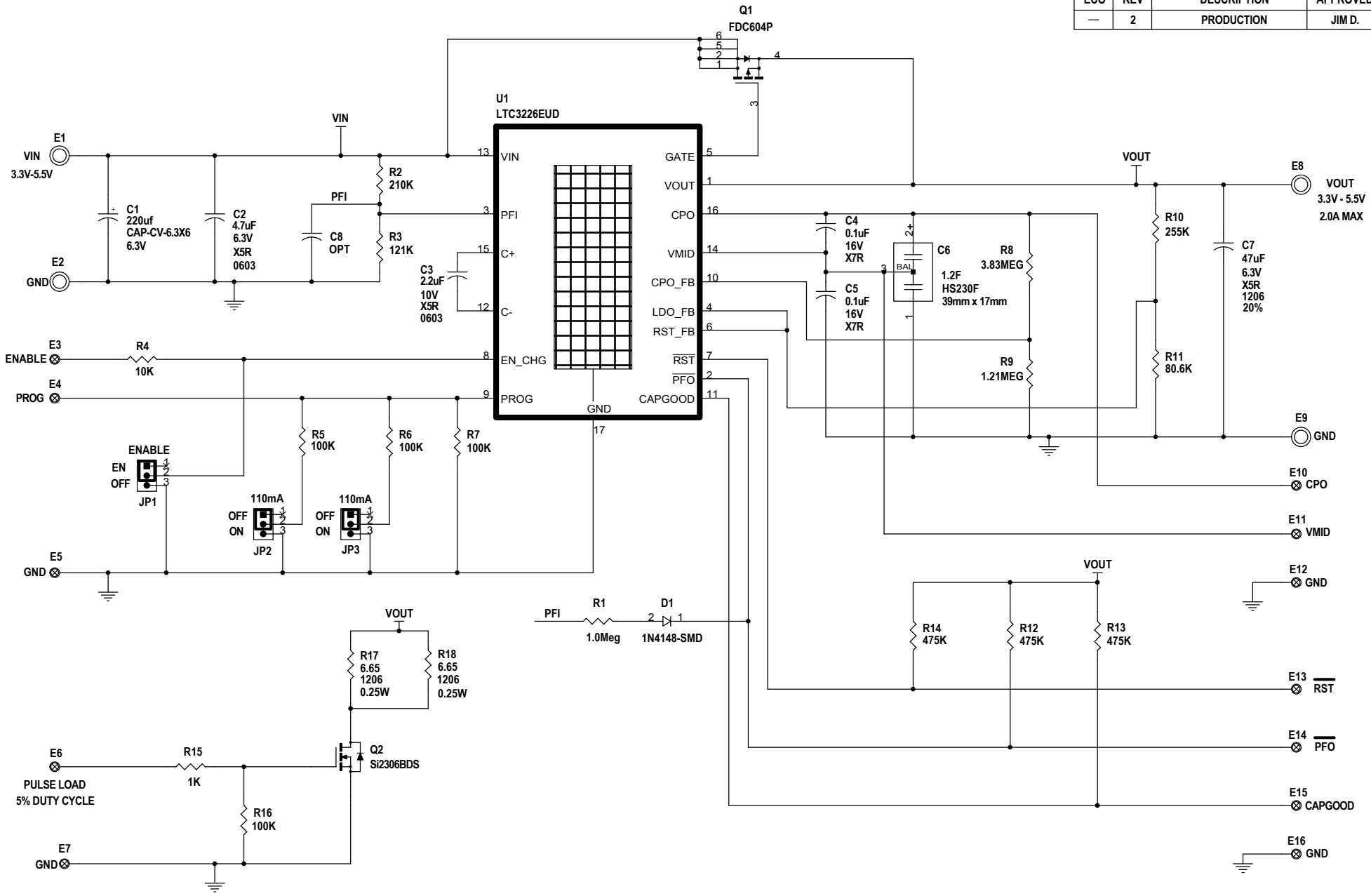

NOTE: UNLESS OTHERWISE SPECIFIED

1. ALL RESISTORS ARE 0402, 1%, 1/16W
   ALL CAPACITORS ARE 0402, 10%
2. INSTALL SHUNTS AS SHOWN.

INPUT CURRENT
LIMIT PROGRAMMING

JP2	JP3	I LIMIT
OFF	OFF	110mA
ON	OFF	220mA
OFF	ON	220mA
ON	ON	330mA

CUSTOMER NOTICE

LINEAR TECHNOLOGY HAS MADE A BEST EFFORT TO DESIGN A CIRCUIT THAT MEETS CUSTOMER-SUPPLIED SPECIFICATIONS; HOWEVER, IT REMAINS THE CUSTOMER'S RESPONSIBILITY TO VERIFY PROPER AND RELIABLE OPERATION IN THE ACTUAL APPLICATION. COMPONENT SUBSTITUTION AND PRINTED CIRCUIT BOARD LAYOUT MAY SIGNIFICANTLY AFFECT CIRCUIT PERFORMANCE OR RELIABILITY. CONTACT LINEAR TECHNOLOGY APPLICATIONS ENGINEERING FOR ASSISTANCE.

THIS CIRCUIT IS PROPRIETARY TO LINEAR TECHNOLOGY AND SUPPLIED FOR USE WITH LINEAR TECHNOLOGY PARTS.

APPROVALS	
PCB DES.	NC
APP ENG.	JIM D.

SCALE = NONE

LINEAR TECHNOLOGY
1630 McCarthy Blvd.
Milpitas, CA 95035
Phone: (408)432-1900 www.linear.com
Fax: (408)434-0507
LTC Confidential-For Customer Use Only

TITLE: SCHEMATIC
2-CELL SUPERCAPACITOR CHARGER WITH BACKUP POWER PATH CONTROLLER

SIZE	IC NO.	REV.
N/A	LTC3226EUD DEMO CIRCUIT 1735A	2

DATE: 05-16-11 SHEET 1 OF 1