REV.	DATE	DESCRIPTION
A	10/25/99	UPDATE CONTACT PIN
B	03/18/05	UPDATE DRAWING FORMAT
C	06/01/06	ADD CRIMP NOTES

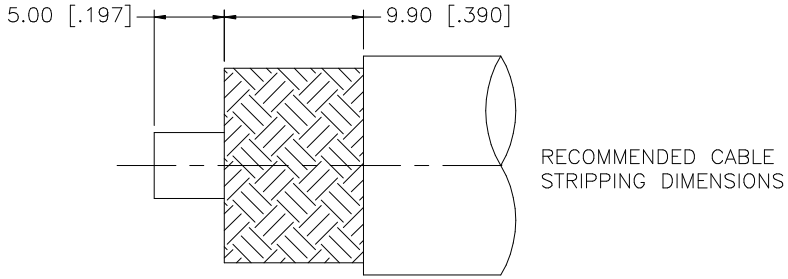

RECOMMENDED CABLE
STRIPPING DIMENSIONS

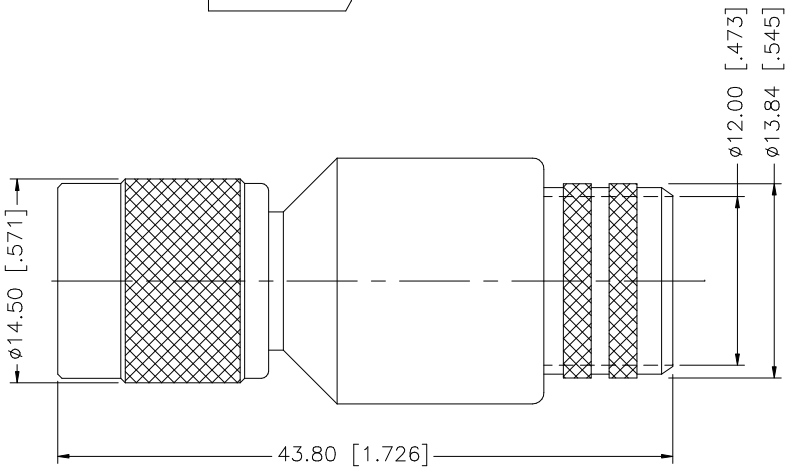

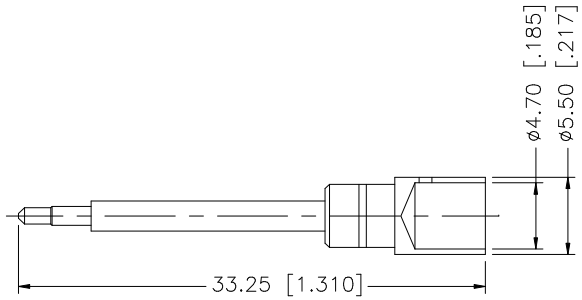

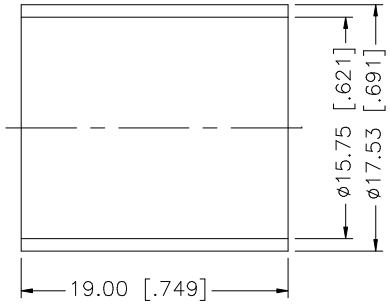

NOTE:

1. USE CONNEX CRIMP HANDLE #47-4009-20 W/DIE #47-4009-01 TO CRIMP FERRULE.
2. SOLDER CENTER CONTACT.

	DESCRIPTION	MATERIAL	FINISH	QTY
8				
7				
6				
5				
4	FERRULE	BRASS	NICKEL	1
3	CONTACT PIN	BRASS	GOLD	1
2	INSULATOR	TEFLON	NATURAL	1
1	BODY	BRASS	NICKEL	1

UNLESS OTHERWISE SPECIFIED DIMENSIONS ARE IN MILLIMETERS. DIMENSIONS IN [ ] ARE IN INCHES AND FOR CUSTOMER REFERANCE ONLY.

UNLESS OTHERWISE SPECIFIED TOLERANCES FOR MILLIMETERS ARE:
0.5 – 8mm ± 0.20mm
8 – 30mm ± 0.40mm
30 – 120mm ± 0.50mm

UNLESS OTHERWISE SPECIFIED TOLERANCES FOR INCHES ARE:
.020 – .315 = ± 0.007"
.315 – 1.180 = ± 0.015"
1.180 – 4.724 = ± 0.020"

DO NOT SCALE DRAWING

APPROVALS		DATE
DRAWN	G.R.S.	06/01/06
CHECKED		
ISSUED		
SHEET	1 OF 1	

CAD FILE C:/122/122417.DWG

Amphenol Connex

PART DESCRIPTION: TNC CRIMP PLUG (FOR LMR 600 CABLE)

PART NO. 122417

DWG. NO. 122417.DWG | REV. C | SIZE A | SCALE NA