MATERIAL NO.	ENGINEERING NO.	FINISHED LENGTH
1300000069	32634	3.0 FT. [0.9M]
1300000070	32635	6.0 FT. [1.8M]
1300000082	32674	18.0 FT. [5.5M]
1300000237	604002C05F200	20.0 FT. [6.1M]
1300000239	604002C05F300	30.0 FT. [9.1M]

PART NUMBER LEGEND

604002C05F200

FINISHED LENGTH:
F010= 1 FOOT
F100= 10 FEET
M005= 0.5 METER
M010= 1 METER
M100= 10 METER

CABLE LENGTH TOLERANCES
>.3M [1FT]: +19mm-0 [+.75in-0]
.3 - .9M [1 - 3FT]: +44.5mm-0 [+1.75in-0]
.9 - 1.8M [3 - 6FT]: +55.6mm-0 [+2.19in-0]
1.8 - 3.7M [6 - 12FT: +88.9mm-0 [+3.50in-0]
3.7 - 7.3M [12 - 24FT]: +165.1mm-0 [+6.50in-0]
7.3-14.6M [24 - 48FT]: +317.5mm-0 [+12.50in-0]
14.6 - 30.5M [48-100FT]: +622.3mm-0 [+24.50in-0]
OVER 30M [100FT] +2% OF FINISHED LENGTH

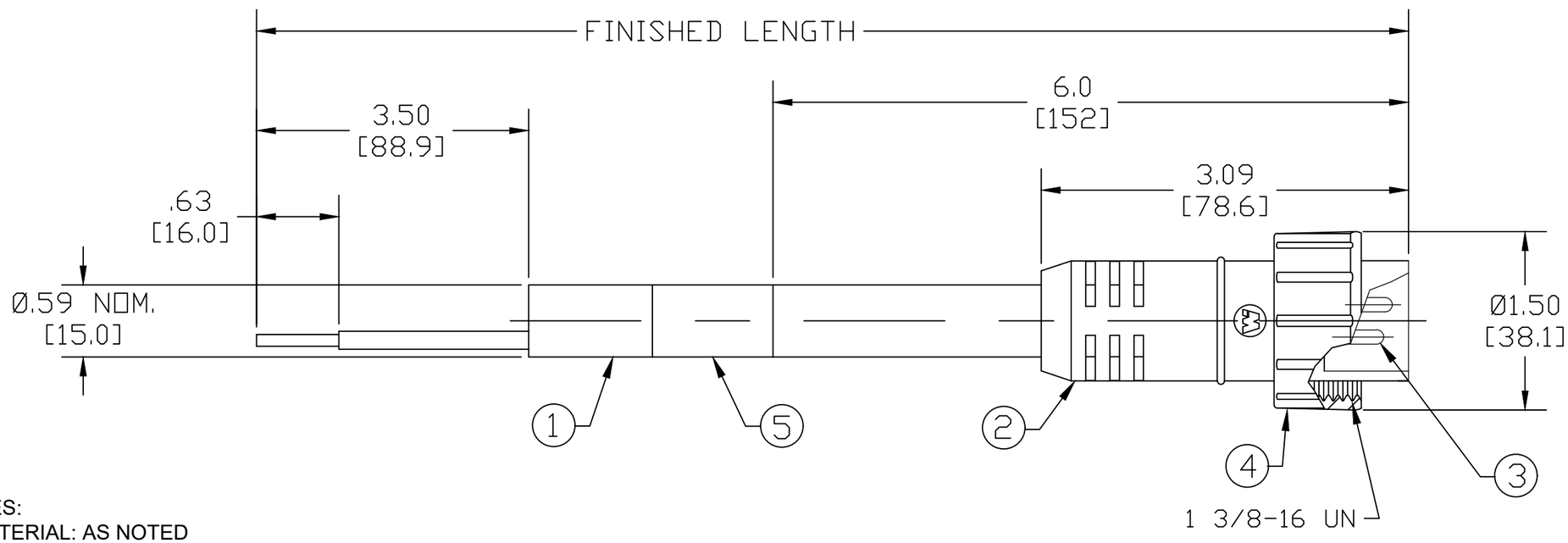

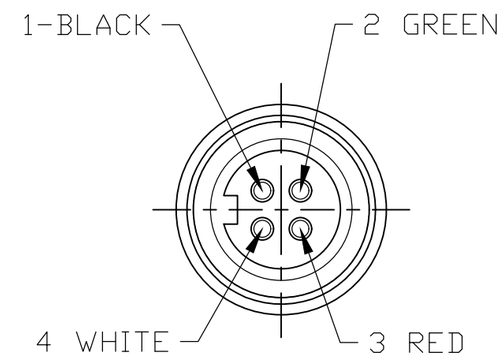

MALE FACE VIEW

NOTES:
1. MATERIAL: AS NOTED
2. FINISH: AS NOTED
3. ELECTRICAL:
   VOLTAGE: 600V AC/DC
   CURRENT: 15A
4. TEMP RATING: -25°C TO +90°C
5. PROTECTION: IP67 (WHEN MATED)
6. COUPLING THREAD: AS NOTED
7. ALL DIMS ARE FOR REFERENCE UNLESS TOLERENCED OR NOTED OTHERWISE

ITEM	COMPONENT	MATERIAL	FINISH
5	WRAP LABEL	VINYL	BLACK/YELLOW
4	COUPLING NUT	THERMOPLASTIC	BLACK
3	CONTACT PIN	COPPER ALLOY	UN-PLATED
2	OVERMOLD	RUBBER	YELLOW
1	CABLE-14 AWG SOOW	CPE JACKET	YELLOW

DOCUMENT STATUS	P1	RELEASE DATE	2019/10/09 12:58:25

SYMBOLS: F = 0, E = 0, D = 0, C = 0, B = 0, A = 0, = 0, = 0

THIS DRAWING CONTAINS INFORMATION THAT IS PROPRIETARY TO MOLEX ELECTRONIC TECHNOLOGIES, LLC AND SHOULD NOT BE USED WITHOUT WRITTEN PERMISSION

DIMENSION UNITS: MM
SCALE: 1:1
GENERAL TOLERANCES (UNLESS SPECIFIED)

	mm	INCH
4 PLACES	±----	±----
3 PLACES	±----	±----
2 PLACES	±----	±----
1 PLACE	±----	±----
0 PLACES	±----	±----
ANGULAR TOL	± ---- °	

DRAFT WHERE APPLICABLE MUST REMAIN WITHIN DIMENSIONS

CURRENT REV DESC: RELEASED
EC NO: 624731
DRWN: RSTONE 2019/09/24
CHK'D: CCHRASTKA 2019/10/01
APPR: BWOODMAN 2019/10/09
INITIAL REVISION:
DRWN: RSTONE 2019/09/24
APPR: BWOODMAN 2019/10/09

THIRD ANGLE PROJECTION

molex

QUICK CHANGE ASSEMBLY
4P MALE STRAIGHT #14-4 YELLOW SOW CORD

PRODUCT CUSTOMER DRAWING

DOCUMENT NUMBER	DOC TYPE	DOC PART	REVISION
1300000070	PSD	000	A

DRAWING	SERIES	MATERIAL NUMBER	CUSTOMER	SHEET NUMBER
B-SIZE	130000	SEE MAT. NO. CHART	GENERAL MARKET	1 OF 1

FORMAT: IN-ACAD-tb-prod-B
REVISION: A1
DATE: 2019/06/12