THIS DRAWING IS UNPUBLISHED. RELEASED FOR PUBLICATION -
© COPYRIGHT 2007 BY - ALL RIGHTS RESERVED.

REVISIONS

P	LTR	DESCRIPTION	DATE	DWN	APVD
	D	Changed spring design	04FEB2010	AV	GT
	E	UPDATED PART REVISION	24FEB2011	AV	GT
	F	REVISED PER ECR-17-004903	09MAY2017	SK	JL
	F1	ALIGNED PART REVISIONS	19NOV2020	MZ	PO

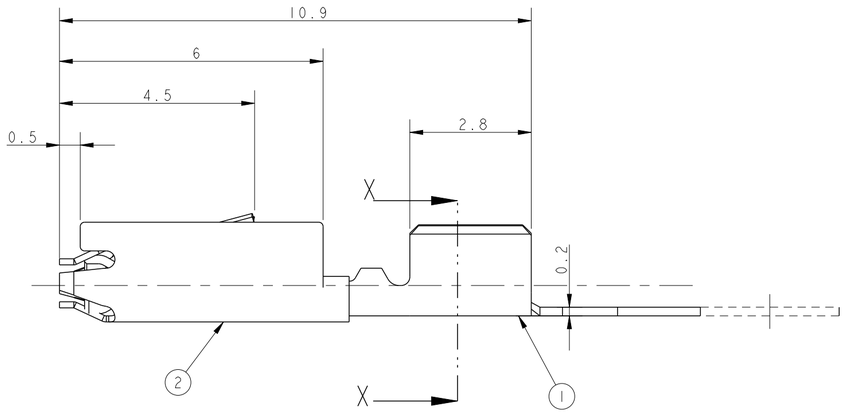

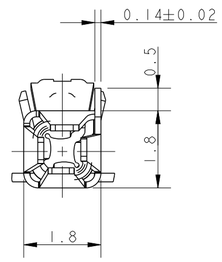

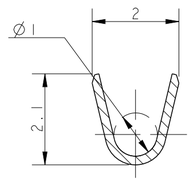

SECTION X - X

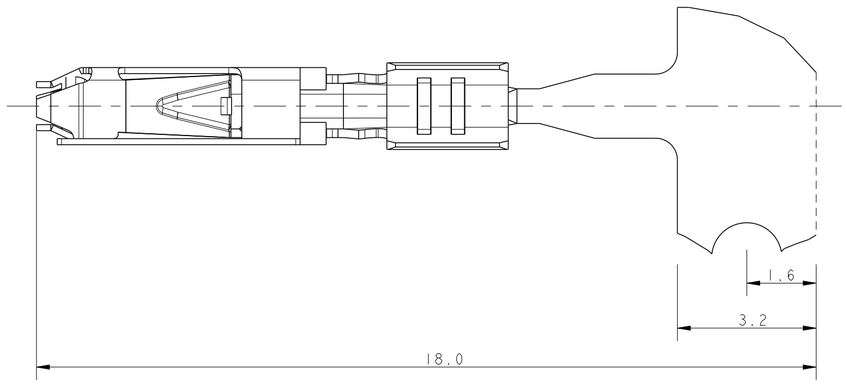

Bemerkungen
NOTES

1. Passend zu Stiftkontckt siehe Zeichnung:AMP:1740335
   SUITABLE FOR PIN CONTACT SEE DRAWING:
2. Kontakt geeignet für Drahtgroessenbereich 0.5....0.75mm²
   CONTACT ACCEPTS WIRE-SIZE 0.5...0.75mm²
3. Halbautomatisches Werkzeug und Handzange
   (je für 2 crimps in einem Durchgang) verfügbar
   SEMI-AUTOMATIC TOOL AND HANDTOOL
   (EACH FOR 2 CRIMPS IN ONE CYCLE) AVAILABLE:
4. Abmantellänge für crimp ist 3,5 mm
   STRIPPED CABLE LENGHT FOR CRIMP IS 3.5mm
5. Gewicht ca. 0,12g
   WEIGHT ABOUT 0.12g
6. Werkzeugvorschub 7,0 mm
   DIE FEED 7,0 mm
7. Aufgerollt auf Kartonspule
   REELED ON PAPER-REEL

DIRECTION OFF TOP OF REEL	LOOSE PIECE	PART NO	REV	POS	DESCRIPTION	MATERIAL	FINISH OF CONTACT AREA
9	~~1740336-8~~	1740336-7	F	2	SPRING	X10CrNi 18 8	
				1	BODY	CuNiSi	GOLD PLATED
9	~~1740336-6~~	1740336-4	F	2	SPRING	X10CrNi 18 8	
				1	BODY	CuNiSi	TIN PLATED
9	1740336-3	1740336-1	F	2	SPRING	X10CrNi 18 8	
				1	BODY	CuNiSi	BLANK

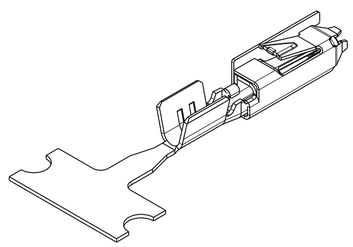

SCALE 5:1

DIRECTION OFF TOP OF REEL
Fertig-
zustand

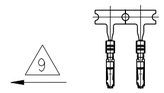

M 1:1

THIS DRAWING IS A CONTROLLED DOCUMENT.

DIMENSIONS: mm

TOLERANCES UNLESS OTHERWISE SPECIFIED:
0 PLC ±-
1 PLC ±0.2
2 PLC ±-
3 PLC ±-
4 PLC ±-
ANGLES ±-

MATERIAL SEE TABLE
FINISH SEE TABLE

DWN PRAVEEN 24 APR 06
CHK S. SKADE 24 APR 06
APVD T. GERLACH 24 APR 06
PRODUCT SPEC 108-94018
APPLICATION SPEC 114-18751
WEIGHT -

TE Connectivity

NAME MICRO QUADLOK SYSTEM
SOCKET CONTACT
-

SIZE	CAGE CODE	DRAWING NO	RESTRICTED TO
A2	00779	C-1740336	

CUSTOMER DRAWING | SCALE 10:1 | SHEET 1 OF 1 | REV F1

1471-9 (3/13)