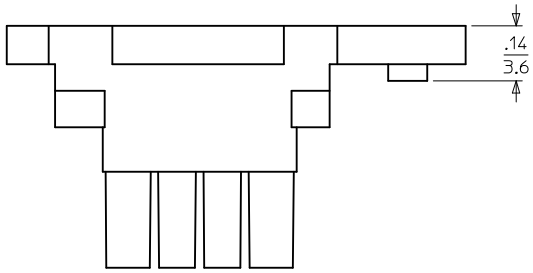

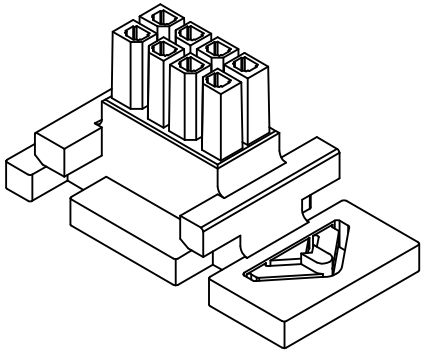

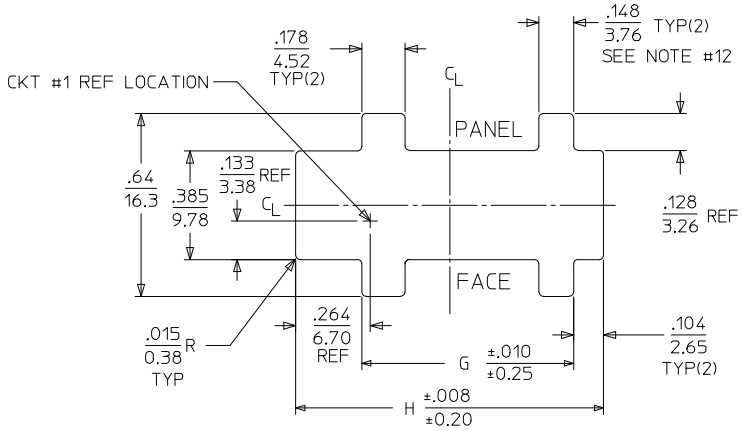

RECOMMENDED PANEL CUT-OUT
(SEE NOTE #7, #9, & #12)

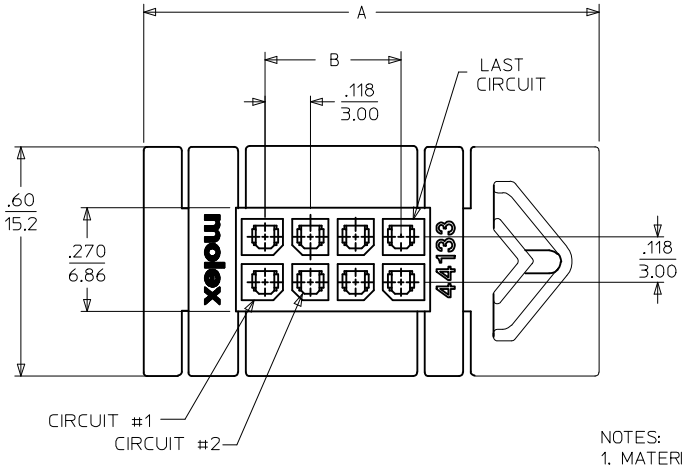

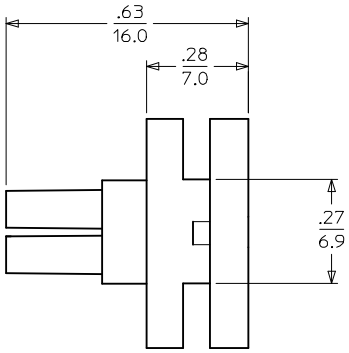

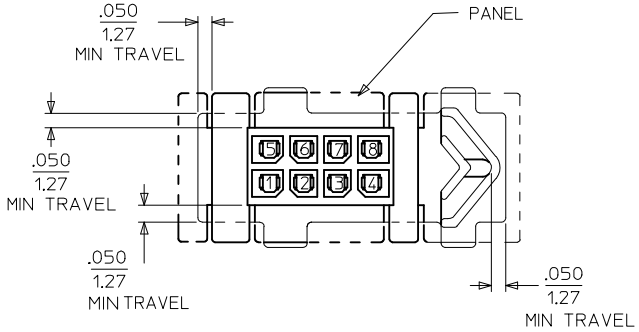

RECEPTACLE SHOWN MOUNTED IN PANEL

NOTES:
1. MATERIAL: UNFILLED POLYESTER (PBT), UL94V-0, COLOR: BLACK
2. FINISH: N/A
3. PRODUCT SPECIFICATION: PS-44300-001
4. PACKAGING SPECIFICATION: TRAY PACKED PER PK-44133-002
5. THIS RECEPTACLE MATES WITH MOLEX BMI PLUG 44300, MOLEX BMI VERTICAL PCB HEADER 44432, MOLEX BMI RIGHT ANGLE PCB HEADER 44428, & MOLEX BMI CPI VERTICAL PCB HEADER 45280. (MOLEX DRAWINGS SD-44300-001, SD-44428-001, SD-44432-001, & SD-45280-001)
6. THIS RECEPTACLE TO BE USED WITH MOLEX FEMALE CRIMP TERMINALS ONLY (SERIES 43030, 45773, OR 46235). SEE APPLICATION SPECIFICATION AS-44133-001 FOR TERMINAL ORIENTATION IN HOUSING.
7. THIS RECEPTACLE IS DESIGNED FOR USE WITH .062/1.57 MAX. TO .050/1.27 MINIMUM THICK PANELS.
8. DIMENSIONS GIVEN ACROSS CENTERLINES ARE SYMMETRICAL ABOUT THOSE CENTERLINES WITHIN THE TOTAL TOLERANCE.
9. WHEN MATING WITH 44300 SERIES, THE PANEL CUT-OUT CENTERLINES OF DIM "H" AND .385/9.78 MUST ALIGN WITH POINT "M" DEFINED BY MOLEX DRAWING SD-44300-001.
10. MOLEX RECOMMENDS THE USE OF MICRO-FIT TEST PLUG (SERIES 44242) WHENEVER CONTINUITY TESTING IS PERFORMED. TEST PLUGS MUST NOT BE USED TO MAKE OR BREAK UNDER LOAD. MOLEX DOES NOT RECOMMEND USING STANDARD MATING COMPONENTS (SERIES 44428, 44432, 44300 OR 45280) FOR HARNESS TESTING PURPOSES.
11. PART CONFORMS TO CLASS 'B' REQUIREMENTS OF COSMETIC SPECIFICATION PS-45499-002. SOME HOUSINGS MAY HAVE A SMALL GATE BLEMISH NEAR THE GATE LOCATION THAT DOES NOT AFFECT FUNCTIONALITY. HOUSINGS MAY EXHIBIT A SURFACE IMPERFECTION KNOW AS "SINK MARKS" UP TO .024/(0.60) MAX. THIS IS A COSMETIC DEFECT AND DOES NOT EFFECT FUNCTION OF THE CONNECTOR.
12. THE WIDTH OF THE NARROW SLOTS SHOULD BE .114-.129/2.90-3.28 (MIN-MAX) IF KEYING OF THE CONNECTOR TO THE CUT-OUT IS DESIRED.

CKT. SIZE	MATERIAL NUMBER	DIM "A"	DIM "B"	DIM "G"	DIM "H"
04	44133-0400	.97 / 24.6	.118 / 3.00	.530 / 13.46	.870 / 22.10
06	44133-0600	1.09 / 27.7	.236 / 6.00	.648 / 16.46	.988 / 25.10
08	44133-0800	1.21 / 30.7	.354 / 9.00	.766 / 19.46	1.106 / 28.10
10	44133-1000	1.33 / 33.8	.472 / 12.00	.884 / 22.46	1.224 / 31.10
12	44133-1200	1.45 / 36.8	.591 / 15.00	1.002 / 25.46	1.343 / 34.10
14	44133-1400	1.57 / 39.9	.709 / 18.00	1.120 / 28.46	1.461 / 37.10
16	44133-1600	1.69 / 42.9	.827 / 21.00	1.239 / 31.46	1.579 / 40.10
18	44133-1800	1.81 / 46.0	.945 / 24.00	1.357 / 34.46	1.697 / 43.10
20	44133-2000	1.93 / 49.0	1.063 / 27.00	1.475 / 37.46	1.815 / 46.10
22	44133-2200	2.04 / 51.8	1.181 / 30.00	1.593 / 40.46	1.933 / 49.10
24	44133-2400	2.16 / 54.9	1.299 / 33.00	1.711 / 43.46	2.051 / 52.10

FIX DIMENSION (G7) 2012/05/25
EC NO: UCP2012-3877 2012/06/08
DRWN:MMSTROH 2012/12/19
CHKD:SSOUSEK
APPR:FSMITH
DESCRIPTION
L4
REV

QUALITY SYMBOLS
=0
=0
=0

GENERAL TOLERANCES (UNLESS SPECIFIED)

	mm	INCH
4 PLACES	± ---	± ---
3 PLACES	± ---	± .010
2 PLACES	± 0.25	± .014
1 PLACE	± 0.35	± ---
0 PLACE	±	±

ANGULAR ±1/2°
DRAFT WHERE APPLICABLE MUST REMAIN WITHIN DIMENSIONS

DIMENSION STYLE: IN/MM
SCALE: ---
DESIGN UNITS: METRIC
THIRD ANGLE PROJECTION

		DATE
DRAWN BY	SOMMER	1998/09/30
CHECKED BY	SOMMER	1998/09/30
APPROVED BY	EDGLEY	1998/09/30

TITLE: MICRO-FIT (3.0) BMI FLOATING PANEL RECEPTACLE, 4-24 CIRCUIT

molex

MATERIAL NO.: SEE CHART
DOCUMENT NO.: SD-44133-001
SHEET NO.: 1 OF 1
SIZE: C

THIS DRAWING CONTAINS INFORMATION THAT IS PROPRIETARY TO MOLEX INCORPORATED AND SHOULD NOT BE USED WITHOUT WRITTEN PERMISSION