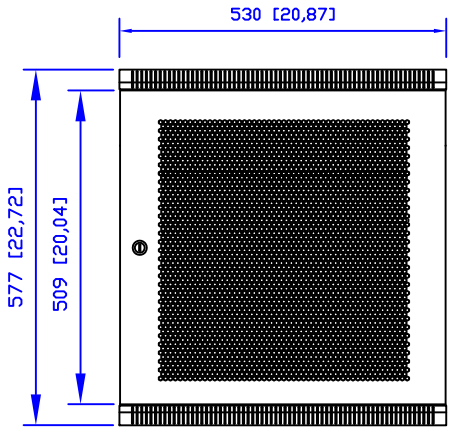

Front

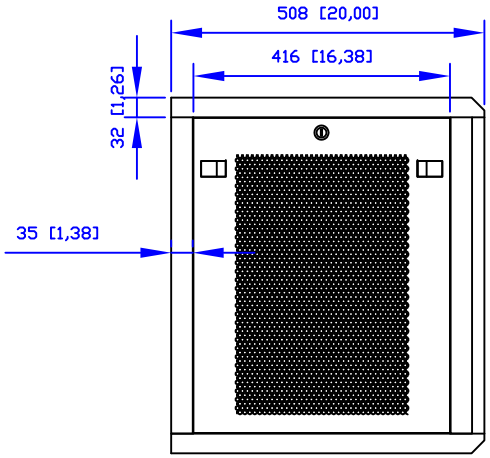

Side

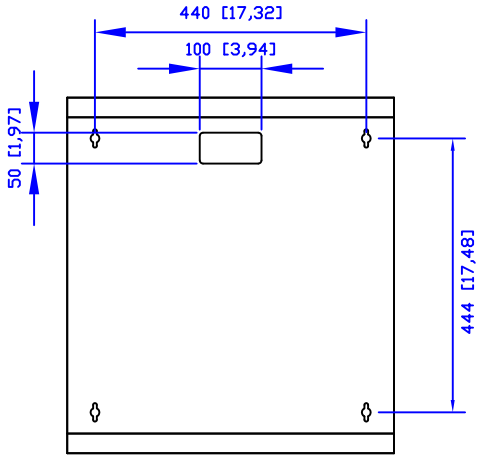

Back

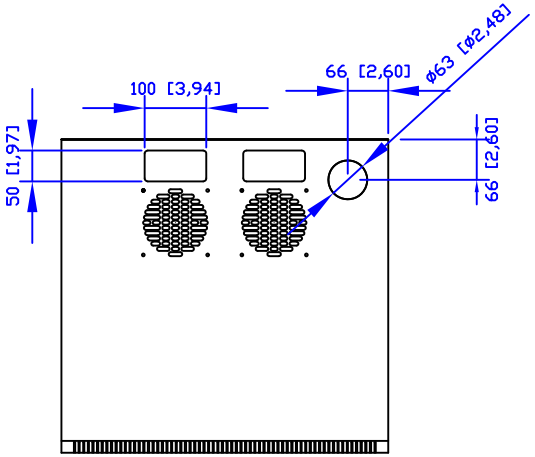

Top

QUEST MANUFACTURING CO.

11200 NW 138 St., Medley, FL 33178 TEL: 305-513-8583 FAX: 305-513-9675
WWW.QuestManufacturing.net

ITEM NO.		WM2119-11-02					
Drawed By		Date		Material	C.R.S.		
Checked By		Date		Unit	mm [inch]		
Approved By		Date		Surface Finish	Power Coat	Scale	1:1