5/32 ROUND SWAGE STANDOFFS

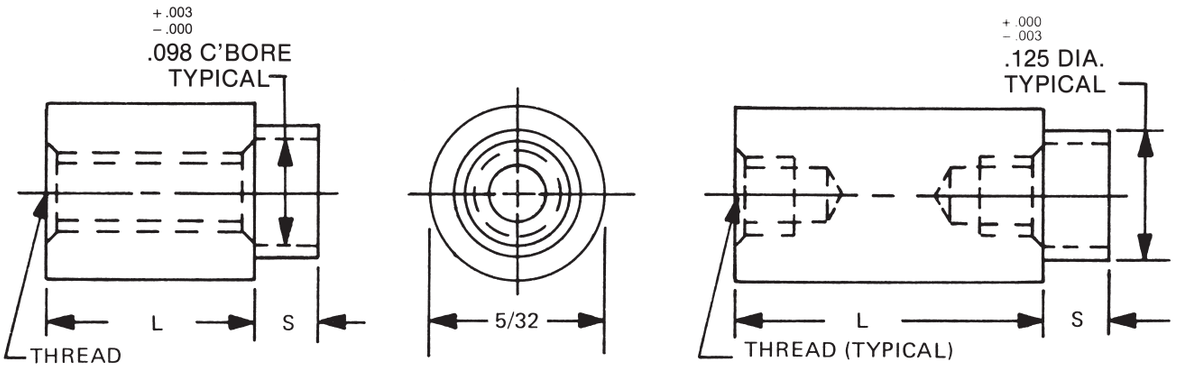

L = STANDOFF LENGTH
S = SHANK LENGTH
P = BOARD THICKNESS

See page iv for installation information

See page 10 for thread depth chart
See page 9 for finish codes
For non-standard parts contact Sales Office

ORDERING CODE

XXXX or XXXXX — LENGTH
X — SHANK
XXX — THREAD
X — MATERIAL
X — FINISH

SWAGE TOOLING		
PUNCH	ANVIL	LENGTH
P-2	AR-14	3/32-3/16
	AR-15	7/32-7/16
	AR-16	15/32-11/16
	AR-17	23/32-1"

SWAGE/PANEL CODE		
±.003	S	P
.075	A	1/32
.105	B	1/16
.135	C	3/32
.165	D	1/8
.230	E	3/16
.290	F	1/4

THREAD	CODE
0-80	080
2-56	256

MATERIAL	CODE	RoHS
Aluminum	AL	YES
Brass	B	YES
Stainless Steel	SS	YES
Steel	S	YES

LENGTH	PART NO.
3/32	3015A
1/8	3015
5/32	3015T
3/16	3016
7/32	3016T
1/4	3017
9/32	3017T
5/16	3018
11/32	3018T
3/8	3019
13/32	3019T
7/16	3020
15/32	3020T
1/2	3021
17/32	3021T

LENGTH	PART NO.
9/16	3022
19/32	3022T
5/8	3023
21/32	3023T
11/16	3024
23/32	3024T
3/4	3025
25/32	3025T
13/16	3026
27/32	3026T
7/8	3027
29/32	3027T
15/16	3028
31/32	3028T
1"	3029

RAF ELECTRONIC HARDWARE
95 Silvermine Road, Seymour, Ct. 06483 Phone: 203-888-2133 Fax: 203-888-9860
e-mail : info@rafhdwe.com Web: www.rafhdwe.com