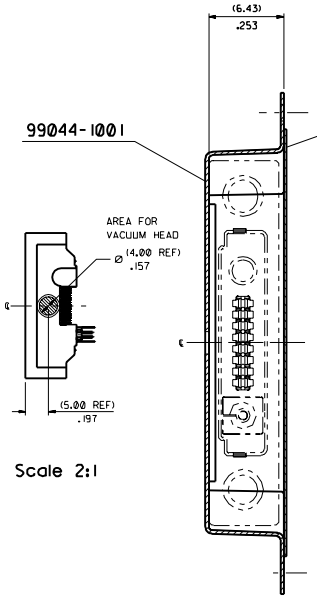

SECTION A - A

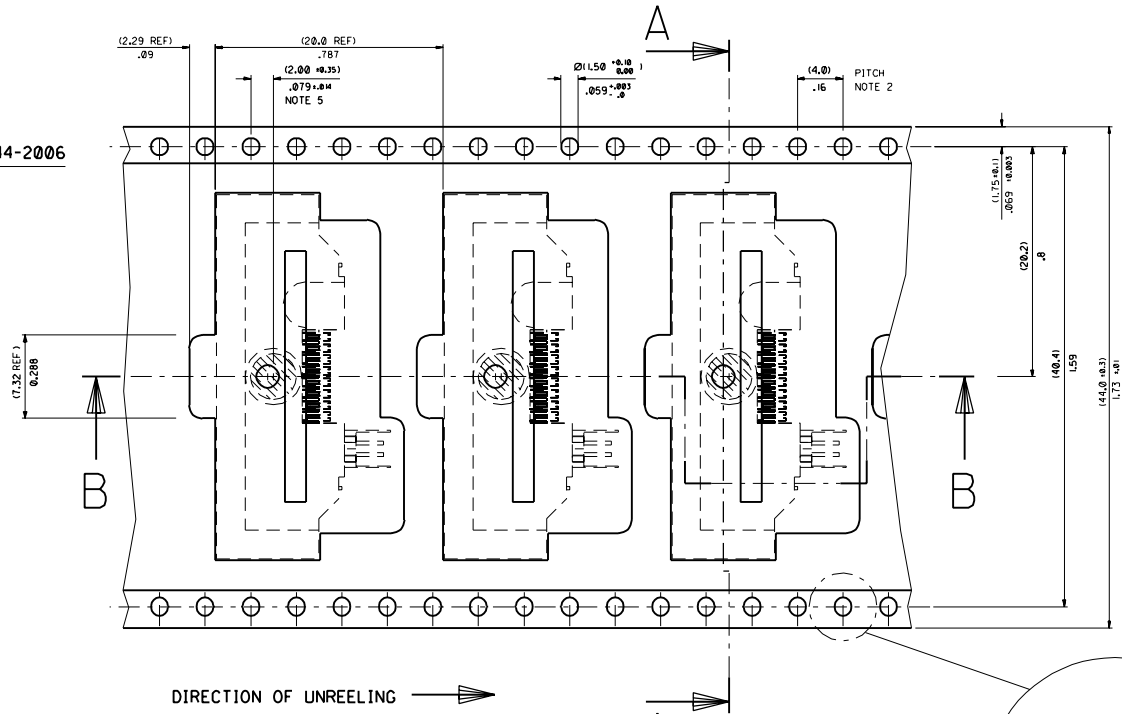

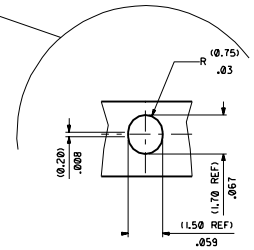

REFERENCE ONLY

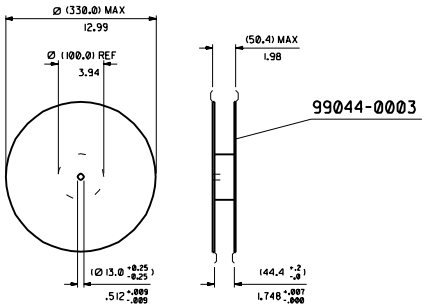

REEL DIMENSIONS

Scale 1:10

(400) PIECES ON A REEL

(THREE) REELS / CARDBOARD BOX

(1200) PIECES IN THE CARDBOARD BOX

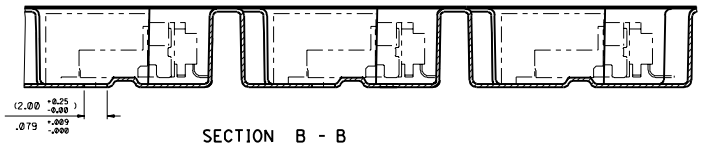

SECTION B - B

MOLEX REEL

NOTES:

1) MATERIAL :
   CARRIER TAPE : VOLUME CONDUCTIVE POLYCARBONATE , (0.37) .014 REF THICK , BLACK
   COVER TAPE : COLD SEAL POLYESTER , (0.061) .002 REF THICK , TRANSPARENT
2) PITCH TOLERANCE OVER ANY 10 PITCHES ±(0.2) .008
3) PEEL FORCE OF THE COVER TAPE IS 0.1N TO 1.0N
   AT A MAXIMUM PEEL SPEED OF (300) 11.81/min ±10%
4) PACKAGING SPEC. TBA
5) REFERENCE TO IEC 286-3 EXCEPT WHERE NOTED

FOR PREVIOUS DRAWING ISSUES SEE MR1.

POCKET UPDATED ECN E56286 95.AC.10 DAB

REVISIONS		
LTR		

DIMENSIONS SHOWN (METRIC) INCH
UNLESS OTHERWISE SPECIFIED TOLERANCES ANGULAR ± 1°

	INCH	(METRIC)
3 PLACE	± .002	
2 PLACE	± .004	± 0.05
1 PLACE		± 0.10

DRAFT WHERE APPLICABLE MUST REMAIN WITHIN DIMENSIONS

DESIGN DIMENSION (PRIMARY) ☒ (MM) ☐ IN.

EQUIVALENT DIMENSION (SECONDARY) ☐ (MM) ☒ IN.

DRWD BY DAB
CHK'D BY
APP'D BY
SCALE 5:1

A3

REVISE ONLY ON CAD SYSTEM | SH. | REV.

CADCAM FILENAME 5908146 DGN

THIS DRAWING CONTAINS INFORMATION THAT IS PROPRIETARY TO MOLEX INC & SHOULD NOT BE USED WITHOUT WRITTEN PERMISSION

TITLE
BLISTER PACKAGING
FOR 90811-9002

MOLEX EUROPE

SHEET NO. 1OF1 | DATE 94/11/10

PART NO. 90811-0002 | DWG NO. SDA-90811-0002 | SIZE D

5453-1004