OAB318 Series

AC Centrifugal Blowers - 115, 230V
318mm x 154.5mm (12.5” x 6.1”)

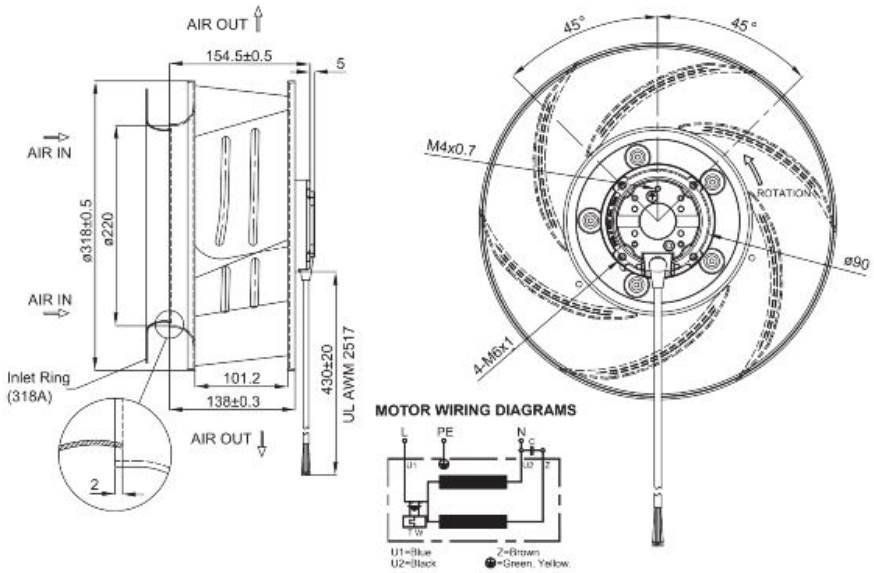

Frame	Die Cast Aluminum, Natural Finish
Impeller	Metal Alloy
Connection	4x Wire Leads, 22 AWG UL 2517
Motor	AC Induction Motor with included Capacitor, Thermally Protected, Class B Insulation
Bearing System	Ball Bearings
Dielectric Strength	1500VAC/Min, <1mA
Insulation Resistance	≥100MΩ @ 500VAC/min

Operating Temperature
-20°C ~ +80°C

Storage Temperature
-40°C ~ +80°C

Life Expectancy
60,000 Hours (L10 at 40°C)

Recommended Accessories
Metal Duct Ring (DR318A)

Included Capacitor
115V: 16uF/250V
230V: 4uF/450V

Weight: 8.6 lbs.

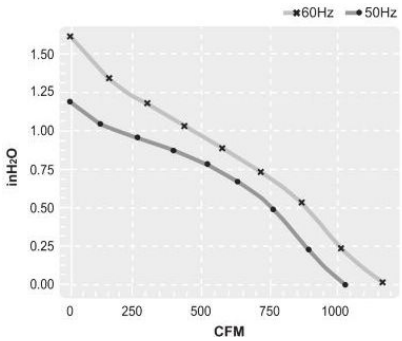

Part Number	Rated Voltage (Volts AC)	Voltage Range (Volts AC)	Frequency (Hertz)	Rated Current (Amps)	Locked Current (Amps)	Input Power (Watts)	Rated Speed (RPM)	Max Airflow (CFM)	Noise Level (dBA)	Max Static Pressure (“H_2O)
OAB318-11-1	115	108 ~ 125	50 / 60	1.1 / 1.4	2.6 / 2.4	115 / 155	1390 / 1580	1015 / 1165	63 / 66	1.2 / 1.6
OAB318-22-1	230	210 ~ 240	50 / 60	0.60 / 0.68	1.43 / 1.31	115 / 155	1390 / 1580	1015 / 1165	63 / 66	1.2 / 1.6

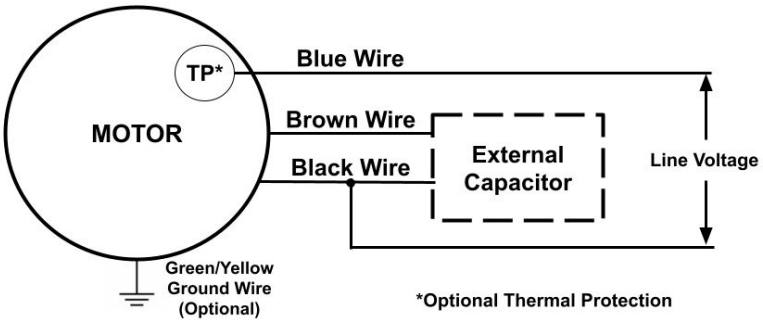

Knight Electronics, Inc.
10557 Metric Drive
Dallas, TX 75243
214-340-0265

Revised 5/4/2023
m2

Orion Fans
Information and data is subject to change without prior notification