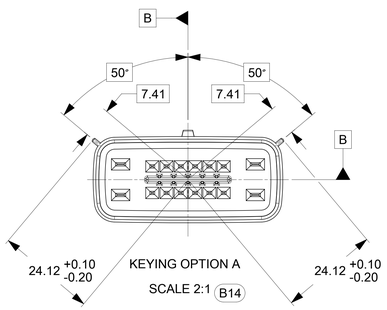

KEYING OPTION A
SCALE 2:1 (B14)

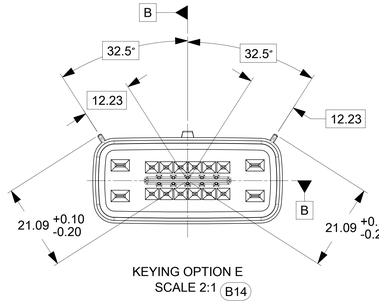

KEYING OPTION E
SCALE 2:1 (B14)

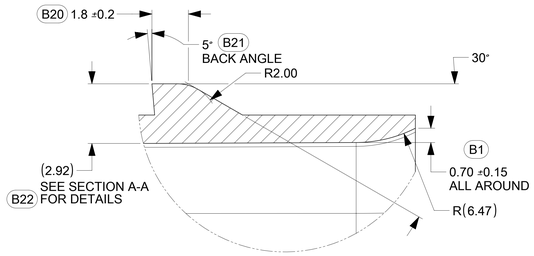

DETAIL F
SCALE 10:1

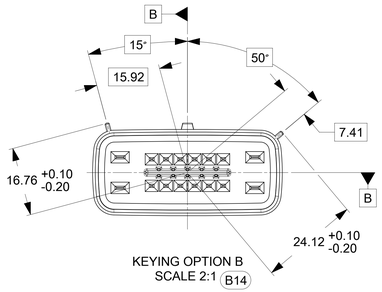

KEYING OPTION B
SCALE 2:1 (B14)

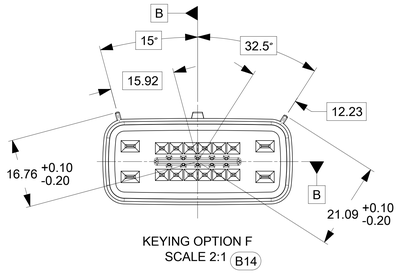

KEYING OPTION F
SCALE 2:1 (B14)

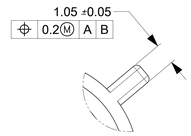

DETAIL C
SCALE 10:1
APPLIES 2X
SEE KEYING OPTION VIEWS
FOR POSITIONS

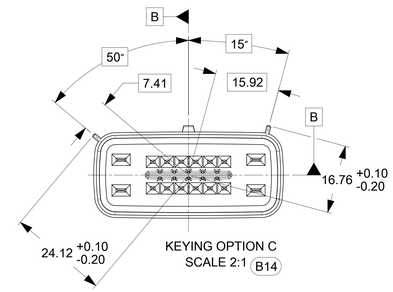

KEYING OPTION C
SCALE 2:1 (B14)

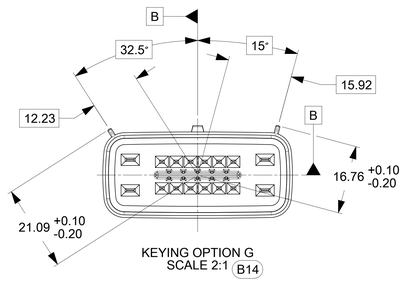

KEYING OPTION G
SCALE 2:1 (B14)

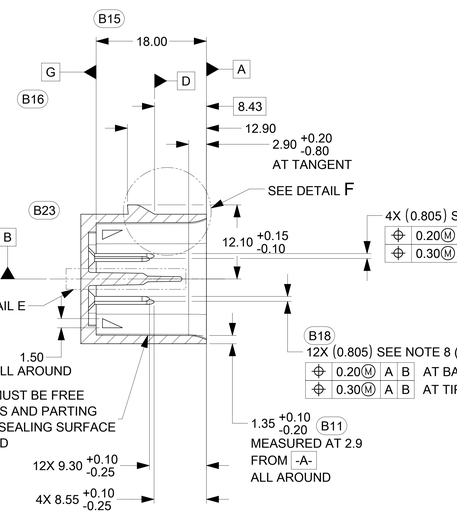

SECTION A-A

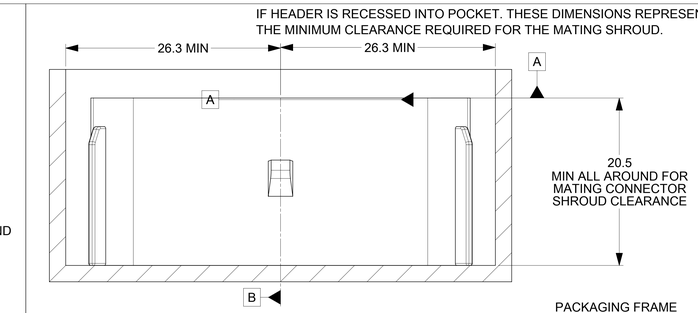

PACKAGING FRAME

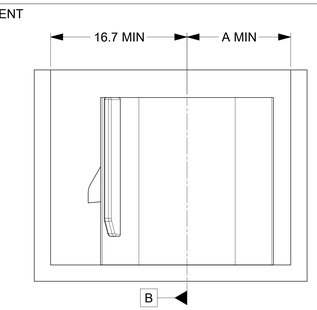

Connector Description	DIMENSION A
CONNECTOR WITHOUT CLIP-SLOT	12.7
CONNECTOR WITH CLIP-SLOT	16.7

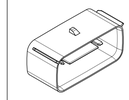

SCALE 1:1

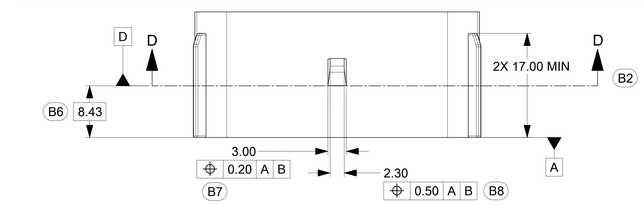

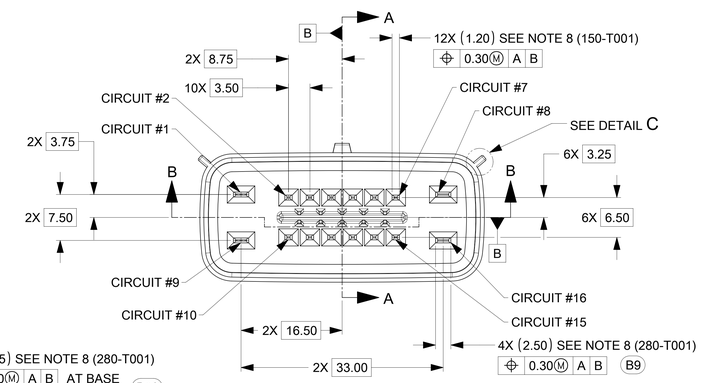

KEYING OPTION D
SCALE 2:1 (B14)

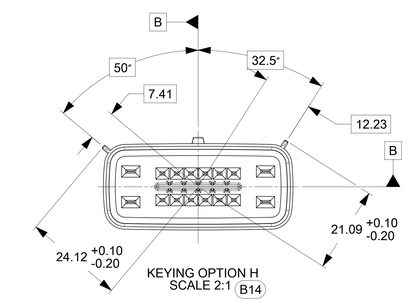

KEYING OPTION H
SCALE 2:1 (B14)

DETAIL E
SCALE 10:1 (B3)

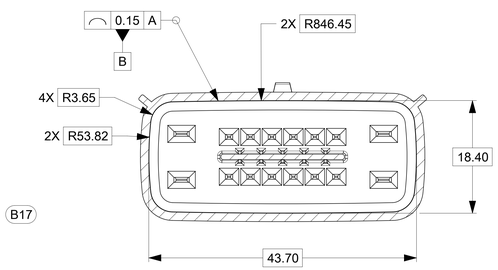

SECTION D-D
AT DATUM -D- (B5)
SCALE 3:1

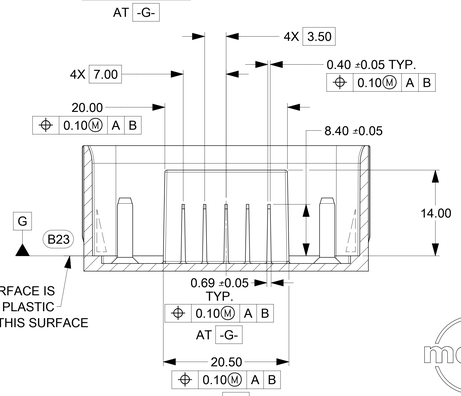

SECTION B-B (B4)
SCALE 3:1

CONSTRUCTION BELOW THIS SURFACE IS
NOT CONTROLED BY EWCAP. NO PLASTIC
FEATURES MAY EXTEND ABOVE THIS SURFACE

NOTES: UNLESS OTHERWISE SPECIFED

1. DRAFT ANGLE PERMISSIBLE 0.25° MAXIMUM.
2. ALL DIMENSIONS SHOWN IN MILLIMETERS.
3. DIMENSIONING AND TOLERANCING PER ASME Y14.5M-1994
4. RADII ON ALL CORNERS SHOWN SHARP OR ALL UNSPECIFED RADII: 0.25 EXCEPT AS NOTED.
5. STANDARD COLORS FOR POLARIZATION (SEE CHART). DEVATION REQUIRES APPROVAL OF AUTHORIZED PERSON.
6. A FULL SHROUD ON THE MATING CONNECTOR IS REQUIRED TO INSURE THAT THE CONNECTOR-HEADER POLARIZATION FEATURES (OPTIONS A THRU H) WILL FUNCTION. THE SHROUD ALSO PREVENTS SCOOP DAMAGE TO THE HEADER PINS. REFER TO "SAE/USCAR-12 CONNECTOR DESIGN GUIDE LINES" FOR ADDITIONAL INFORMATION.
7. REFER TO USCAR/EWCAP PART LIST AS FOUND ON WEBSITE http://www.uscarteams.org

(B13) 8. FOR BLADE TERMINAL DESIGN INFORMATION SEE EWCAP DWG. # EWCAP-001

(B12) 9. THIS IS A 100% CAD GENERATED PART. THE CAD MATHEMATICAL DATA IS THE MASTER FOR THIS PART. FOR DIMENSIONAL OR ANY INFORMATION NOT SHOWN ON THIS DRAWING, ANALYZE THE CAD MODEL.

999-S-016-2-H01	H	YELLOW
999-S-016-2-G01	G	YELLOW
999-S-016-2-F01	F	YELLOW
999-S-016-2-E01	E	YELLOW
999-S-016-2-D01	D	BLACK
999-S-016-2-C01	C	DARK GREY
999-S-016-2-B01	B	GREY
999-S-016-2-A01	A	BLACK
EWCAP PIN	OPTION	MATING CONNECTOR COLOR

162	C	CHARTED DIMENSION ADDED FOR WITH AND WITHOUT CLIPSLOT	8-3-20	GE	MV
088	B23	ADDED DRAFT DIRECTION SYMBOL	3-25-11		
088	B22	ADDED REF DIMENSION FOR	3-11-11		
		LATCH HEIGHT			
088	B21	REMOVED THE WORD "OPTION"	3-11-11		
		AT VIEW OF BACK ANGLE			
088	B20	CHANGED FROM 1.79 TO 1.80	3-11-11		
088	B19	ADDED 4X (0.805) 0.20Ⓜ A B AT BASE	1-14-11		
		AND 0.30Ⓜ A B AT TIP FOR 2.8			
		BLADE TERMINALS			
088	B18	CHANGED 16X TO 12X FOR THE 1.5	1-14-11		
		BLADE TERMINALS			
088	B17	UPDATED CONNECTOR COLORS	1-14-11		
088	B16	ADDED -G-	5-04-10		
088	B15	REMOVED // 0.10Ⓜ A B	5-04-10		
088	B14	REMOVED SHORTING BAR NOTE	5-04-10		
088	B13	UPDATED NOTE 8 REMOVED REV F	5-04-10		
088	B12	ADDED NOTE 9	5-04-10		
088	B11	ADDED DIM 1.35+0.10/-0.20 MEASURED	5-04-10		
		AT 2.9 FROM -A- ALL AROUND			
088	B10	ADDED SEE NOTE 8	5-04-10		
088	B9	2.50 WAS 2.80, ADDED (280-T001)	5-04-10		
088	B8	ADDED 0.50 A B	5-04-10		
088	B7	ADDED 0.20 A B	5-04-10		
088	B6	ADDED DIM 8.43	5-04-10		
088	B5	ADDED SEC C-C	5-04-10		
088	B4	UPDATED SEC B-B	5-04-10		
088	B3	ADDED DETAIL D	5-04-10		
088	B2	ADDED SEC C-C	5-04-10		
088	B1	ADDED DIM 0.70±0.15 ALL AROUND	5-04-10		
088	B	RELEASED	5-04-10	KC	MV
CHANGE SERIAL NUMBER	LET	REVISION RECORD	DATE	DWN	CHK

TOLERANCES (UNLESS OTHERWISE SPECIFIED)
DIMENSIONS ARE IN MILLIMETERS
ANGLES ±3°
X ±0.2 XX ±0.10

THIRD ANGLE PROJECTION

EWCAP

SCALE 4 - 1 | DRAWN BY G.ELLIOTT | CHECKED BY M.VANSLAMBROUCK | DATE 08-03-20

TITLE
DIRECT CONNECT INTERFACE
16 WAY (2 X 8) 1.5MM SEALED MALE

SHEET - OF - | DRAWING NUMBER 999-S-016-2-Z02 | SIZE E | DO NOT SCALE DRAWING COMPUTER AIDED DRAWING | REVISION LEVEL C

TABLE OF CONTENTS

SHEET NO.	SHEET DESCRIPTION
1	NOTES AND BOM
2	CONFIGURATIONS
3	KEY CONFIGURATIONS
4	RECEPTACLE CONNECTOR ASSEMBLY

NOTES: VALID UNLESS OTHERWISE SPECIFIED

1. GENERAL:
a. APPLICATION SPECIFICATION SEE: AS-33472-100
-CONTAINS: PRODUCT INTRODUCTION, PRODUCT SUMMARY, CONNECTOR ASSEMBLY, PACKAGING INFORMATION, CONNECTOR MATING, SERVICE INSTRUCTIONS, ELECTRICAL CONTINUITY CHECKING, CRIMPING, AND TROUBLESHOOTING.
-DESIGNED TO MATE WITH DEVICE OR CONNECTOR AS SPECIFIED IN THE MATING INTERFACE/CONNECTOR DRAWINGS CHART.
*DENOTES DRAWINGS THAT CAN BE ACCESSED AT <http://ewcap.uscarteams.org/>.
-ASSEMBLY SHIPPED WITH PLR IN PRE-LOCK POSITION (SEE PLR PRE-LOCK VIEW SHEET 4).

b. PRODUCT SPECIFICATION SEE: PS-33476-000
CONTAINS: PRODUCT INTRODUCTION, PRODUCT SUMMARY, RATINGS (CURRENT, TEMPERATURE, SEALING, AND FLAMMABILITY), TERMINALS, WIRE DIAMETER RANGE, PRODUCT VALIDATION, AND PRODUCT DEVIATIONS.
c. PACKAGING SPECIFICATION PER MOLEX DRAWING: SEE PACKAGING CHART
d. PARTS MUST BE IN COMPLIANCE TO MOLEX CHEMICAL SUBSTANCES FOR PRODUCTS AND PACKAGING SPECIFICATION: QEHS-699000-300
e. DATA MUST BE SUBMITTED UNDER THE MOLEX PART NUMBER TO IMDS (COMPANY ID#13255)

2. DESIGN - MATERIALS:
a. SEE BOM TABLE IN SD-34985-8002

3. DESIGN - GEOMETRY:
a. THE 3-D CAD DATA IS BASIC (WITHOUT TOLERANCE) AND MASTER FOR THIS PART WITH THE EXCEPTION OF UNDERLINED DIMENSIONS. DIMENSIONAL INFORMATION NOT SHOWN ON THIS DRAWING IS DEFINED BY THE DATA FILE AT ITS LATEST REVISION.
b. GEOMETRIC DIMENSIONS AND TOLERANCES PER ASME Y14.5M-2009
c. EDGES AND UNDIMENSIONED DETAILS PER ISO13715
d. CORNERS SHOWN AS SHARP TO BE R 0.2 MAX.
e. LETTERING SHALL BE 0.15 MAX RAISED IN 0.25 MAX RECESS PAD. THIS INCLUDES RECYCLING CODE, CAVITY ID, VENDOR IDENTIFICATION, AND CUSTOMER MATERIAL NUMBER.
f. VISUAL DEFECTS SHALL MEET COSMETIC STANDARD PS-45499-002 (Class B).
g. LASER MARKING:
1. PART NUMBER
2. DAY OF THE YEAR
3. SHIFT
4. YEAR
FOR ADDITIONAL INFORMATION SEE SECTION 5 UNDER PROCEDURES IN ES-34735-008.

PACKAGING

DESCRIPTION	DRAWING NO.
W/ CLIPSLOT	PK-30907-895
W/O CLIPSLOT	PK-31300-094

MATING INTERFACE/CONNECTOR DRAWINGS

DESCRIPTION	INTERFACE DEFINITION	MOLEX INLINE
W/O SHORTING BAR	*999-S-016-2-Z02	SD-34986-8001
W/ SHORTING BAR	N/A	SD-34986-8001

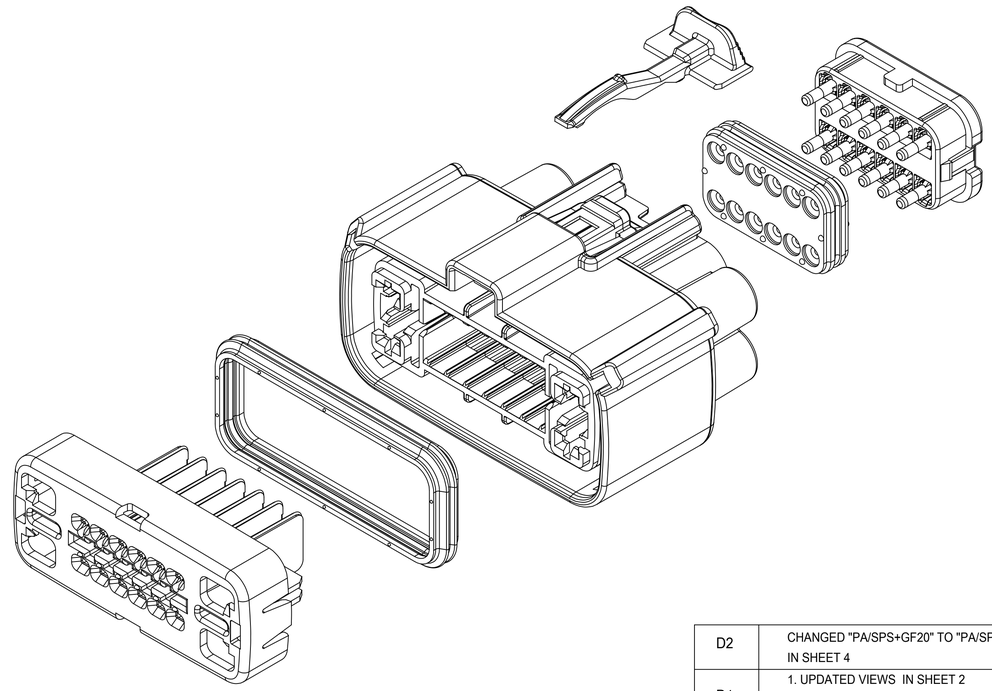

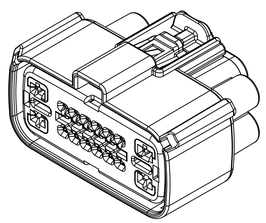

REV	REV DESCRIPTION
D2	CHANGED "PA/SPS+GF20" TO "PA/SPS-GF20" IN SHEET 4
D1	1. UPDATED VIEWS IN SHEET 2 2. CHANGED DIM 10.98 TO 11.00, 6.61 TO 6.60, 15.00+/-0.10 TO 15.00+0.30/-0.20 IN SHEET 4
D	REMOVED BOM (REFER TO SD-34985-8002)
C	NEW P/N 34985-4026 THRU 4028
B	NEW P/N 34985-4023 THRU 4025
A2	UPDATED PACKAGING DWGS
A1	FIXED TYPO IN NOTE 1a
A	INITIAL RELEASE

INSPECTION NUMBER LOG
LAST NUMBER: 11
ADDED:
REMOVED:

THIS DRAWING CONTAINS INFORMATION THAT IS PROPRIETARY TO MOLEX ELECTRONIC TECHNOLOGIES, LLC AND SHOULD NOT BE USED WITHOUT WRITTEN PERMISSION

SYMBOLS: = 0

DIMENSION UNITS	SCALE
mm	1.5:1

GENERAL TOLERANCES (UNLESS SPECIFIED)

ANGULAR TOL	±	3.0 °
4 PLACES	±	
3 PLACES	±	
2 PLACES	±	0.1
1 PLACE	±	0.3
0 PLACES	±	

DRAFT WHERE APPLICABLE MUST REMAIN WITHIN DIMENSIONS

CURRENT REV DESC:

EC NO: 619601
DRWN: HKLIANG 2019/07/25
CHK'D: MVANSLAMBROU 2019/08/02
APPR: MVANSLAMBROU 2019/08/02

INITIAL REVISION:
DRWN: TYE 2014/09/12
APPR: VKOSHY 2014/09/22

THIRD ANGLE PROJECTION | DRAWING: A1-SIZE | SERIES: 34985

molex

MX150 16 WAY HYBRID
RECPT SEALED ASSEMBLY

PRODUCT CUSTOMER DRAWING

DOCUMENT NUMBER	DOC TYPE	DOC PART	REVISION
SD-34985-8001	PSD	001	D2

MATERIAL NUMBER | CUSTOMER: GENERAL MARKET | SHEET NUMBER: 1 OF 4

DOCUMENT STATUS	P1	RELEASE DATE	2019/08/02 15:55:47

SHEET DESCRIPTION

CONFIGURATIONS

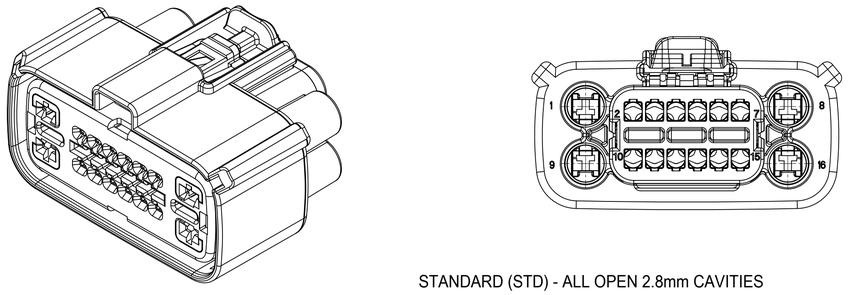

STANDARD (STD) - ALL OPEN 2.8mm CAVITIES

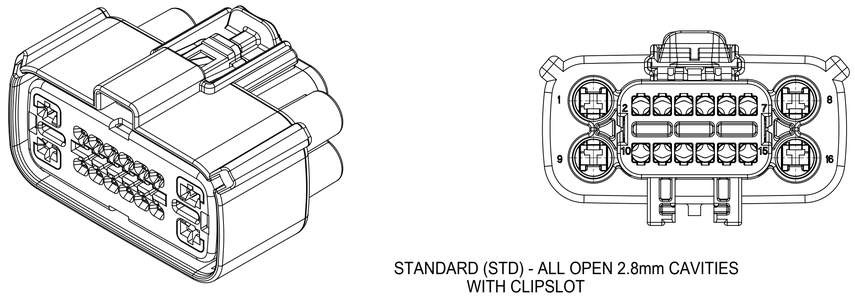

STANDARD (STD) - ALL OPEN 2.8mm CAVITIES
WITH CLIPSLOT

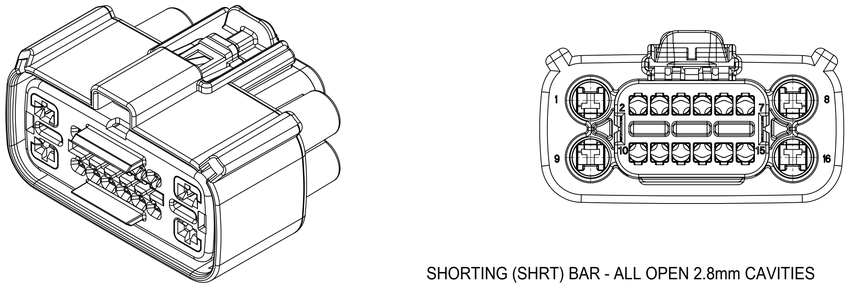

SHORTING (SHRT) BAR - ALL OPEN 2.8mm CAVITIES

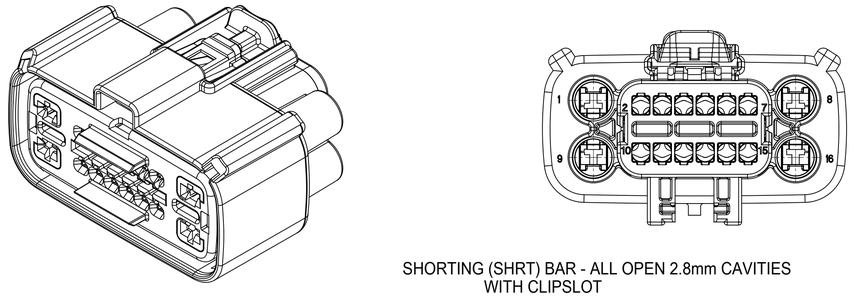

SHORTING (SHRT) BAR - ALL OPEN 2.8mm CAVITIES
WITH CLIPSLOT

SYMBOLS		
A = 0	DIMENSION UNITS: mm	SCALE: 2:1
C = 0	GENERAL TOLERANCES (UNLESS SPECIFIED)	
E = 0	ANGULAR TOL ± 3.0 °	
S = 0	4 PLACES ±	
▼ = 0	3 PLACES ±	
C = 0	2 PLACES ± 0.1	
☒ = 0	1 PLACE ± 0.3	
■ = 0	0 PLACES ±	
= 0	DRAFT WHERE APPLICABLE MUST REMAIN WITHIN DIMENSIONS	

THIS DRAWING CONTAINS INFORMATION THAT IS PROPRIETARY TO MOLEX ELECTRONIC TECHNOLOGIES, LLC AND SHOULD NOT BE USED WITHOUT WRITTEN PERMISSION

CURRENT REV DESC:

EC NO: 619601
DRWN: HKLIANG 2019/07/25
CHK'D: MVANSLAMBROU 2019/08/02
APPR: MVANSLAMBROU 2019/08/02

INITIAL REVISION:
DRWN: TYE 2014/09/12
APPR: VKOSHY 2014/09/22

THIRD ANGLE PROJECTION | DRAWING: A1-SIZE | SERIES: 34985

molex

MX150 16 WAY HYBRID
RECPT SEALED ASSEMBLY

PRODUCT CUSTOMER DRAWING

DOCUMENT NUMBER	DOC TYPE	DOC PART	REVISION
SD-34985-8001	PSD	001	D2

MATERIAL NUMBER	CUSTOMER	SHEET NUMBER
	GENERAL MARKET	2 OF 4

DOCUMENT STATUS	P1	RELEASE DATE	2019/08/02 15:55:47

FORMAT: molex-hi-prod-A1
TEMPLATE: 0000-00-00
DATE: 2018/01/16

SHEET DESCRIPTION

KEY CONFIGURATIONS

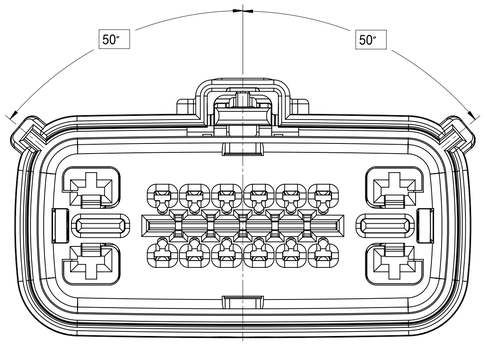

KEY A

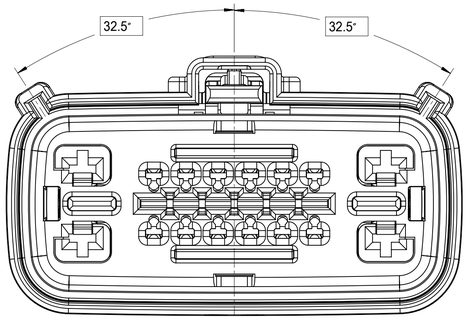

KEY E

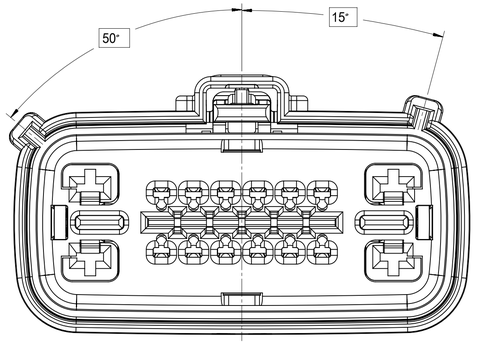

KEY B

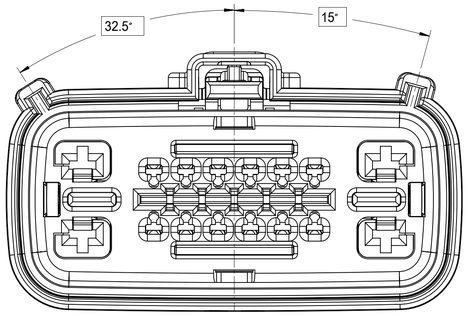

KEY F

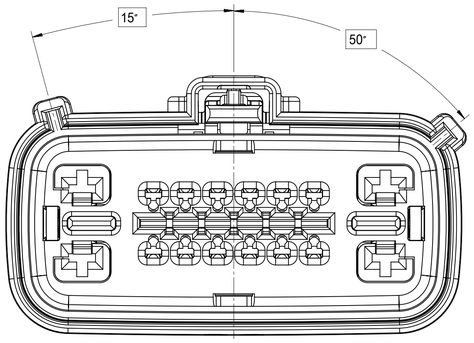

KEY C

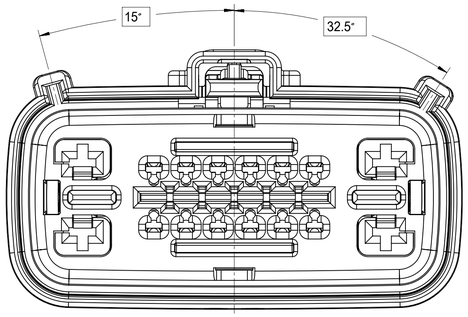

KEY G

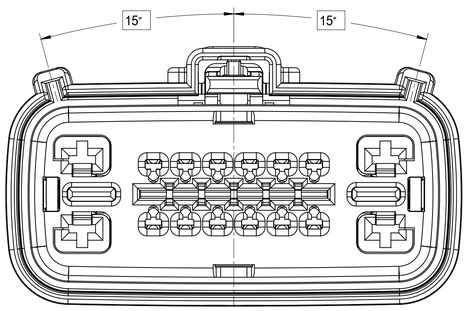

KEY D

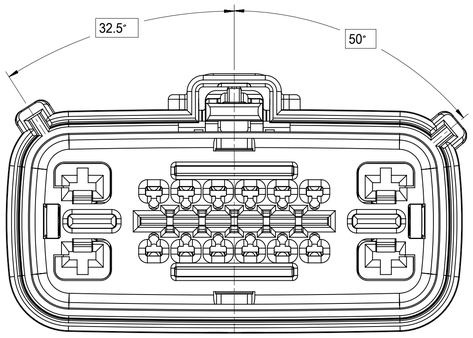

KEY H

SYMBOLS	
A = 0	
E = 0	
F = 0	
S = 0	
= 0	
C = 0	
= 0	
= 0	
= 0	

THIS DRAWING CONTAINS INFORMATION THAT IS PROPRIETARY TO MOLEX ELECTRONIC TECHNOLOGIES, LLC AND SHOULD NOT BE USED WITHOUT WRITTEN PERMISSION

DIMENSION UNITS	SCALE
mm	3:1

GENERAL TOLERANCES (UNLESS SPECIFIED)

ANGULAR TOL	±	3.0 °
4 PLACES	±	
3 PLACES	±	
2 PLACES	±	0.1
1 PLACE	±	0.3
0 PLACES	±	

DRAFT WHERE APPLICABLE MUST REMAIN WITHIN DIMENSIONS

CURRENT REV DESC:

EC NO: 619601
DRWN: HKLIANG 2019/07/25
CHK'D: MVANSLAMBROU 2019/08/02
APPR: MVANSLAMBROU 2019/08/02

INITIAL REVISION:
DRWN: TYE 2014/09/12
APPR: VKOSHY 2014/09/22

THIRD ANGLE PROJECTION

DRAWING	SERIES
A1-SIZE	34985

molex

MX150 16 WAY HYBRID
RECPT SEALED ASSEMBLY

PRODUCT CUSTOMER DRAWING

DOCUMENT NUMBER	DOC TYPE	DOC PART	REVISION
SD-34985-8001	PSD	001	D2

MATERIAL NUMBER	CUSTOMER	SHEET NUMBER
	GENERAL MARKET	3 OF 4

DOCUMENT STATUS	P1	RELEASE DATE	2019/08/02 15:55:47

FORMAT: molex-tb-prod-A1
TEMPLATE: 000000
DATE: 2018/01/18

SHEET DESCRIPTION

RECEPTACLE CONNECTOR ASSEMBLY

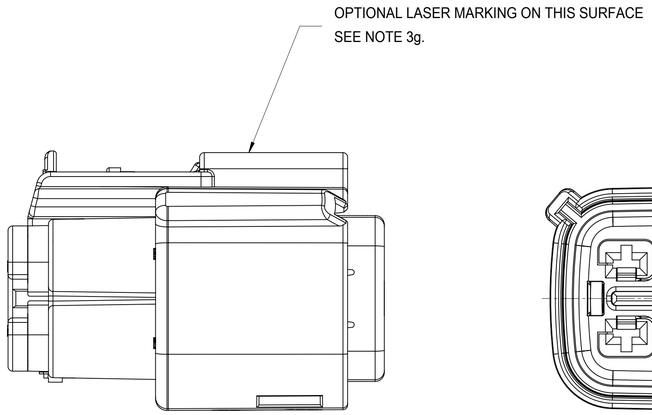

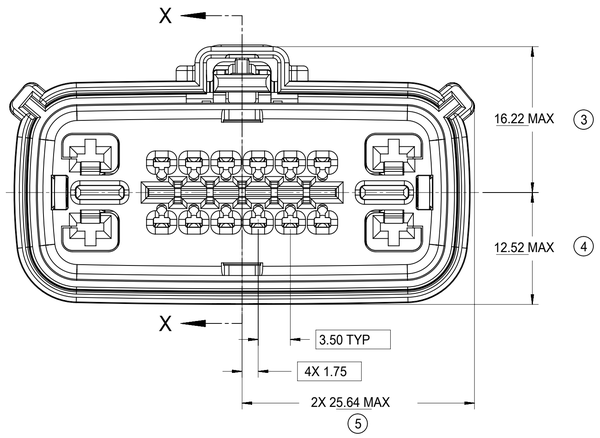

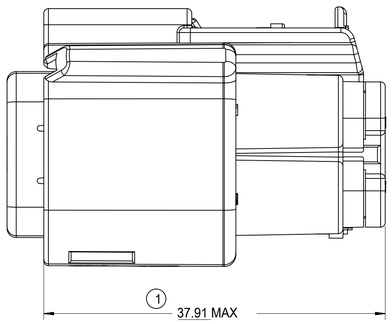

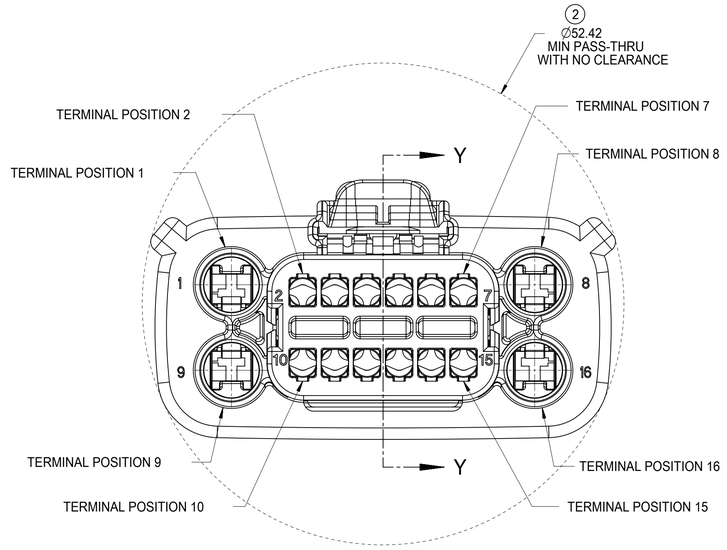

REAR VIEW
(WIRE HARNESS SIDE)

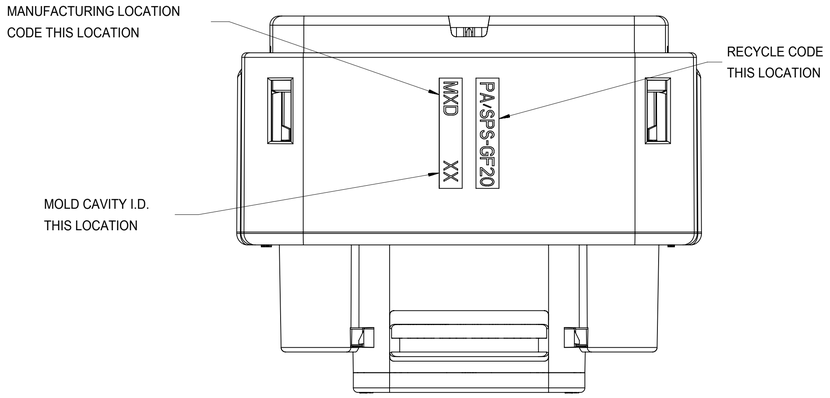

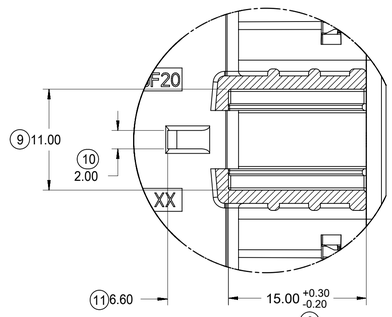

SECTION Z-Z
SCALE 3:1

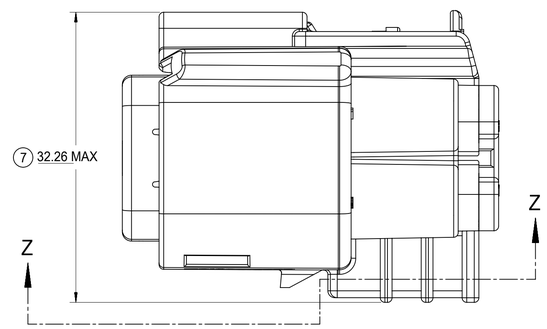

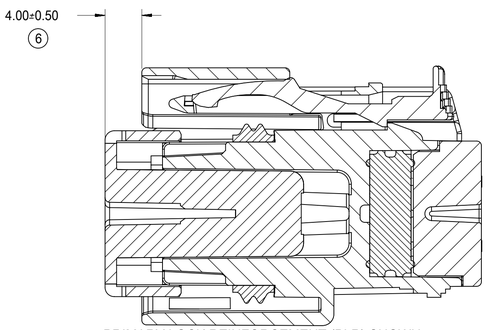

PRIMARY LOCK REINFORCEMENT (PLR) SHOWN
IN PRE-STAGED POSITION

SECTION X-X

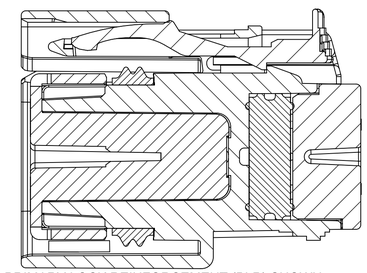

PRIMARY LOCK REINFORCEMENT (PLR) SHOWN
IN FINAL-LOCK POSITION

SECTION Y-Y

SYMBOLS	
A	= 0
B	= 0
D	= 0
E	= 0
F	= 0
C	= 0
	= 0
	= 0
	= 0

THIS DRAWING CONTAINS INFORMATION THAT IS PROPRIETARY TO MOLEX ELECTRONIC TECHNOLOGIES, LLC AND SHOULD NOT BE USED WITHOUT WRITTEN PERMISSION

DIMENSION UNITS	SCALE
mm	3:1

GENERAL TOLERANCES (UNLESS SPECIFIED)		
ANGULAR TOL	±	3.0 °
4 PLACES	±	
3 PLACES	±	
2 PLACES	±	0.1
1 PLACE	±	0.3
0 PLACES	±	

DRAFT WHERE APPLICABLE MUST REMAIN WITHIN DIMENSIONS

CURRENT REV DESC:

EC NO: 619601
DRWN: HKLIANG 2019/07/25
CHK'D: MVANSLAMBROU 2019/08/02
APPR: MVANSLAMBROU 2019/08/02

INITIAL REVISION:
DRWN: TYE 2014/09/12
APPR: VKOSHY 2014/09/22

THIRD ANGLE PROJECTION

DRAWING	SERIES
A1-SIZE	34985

molex

MX150 16 WAY HYBRID
RECPT SEALED ASSEMBLY

PRODUCT CUSTOMER DRAWING

DOCUMENT NUMBER	DOC TYPE	DOC PART	REVISION
SD-34985-8001	PSD	001	D2

MATERIAL NUMBER	CUSTOMER	SHEET NUMBER
	GENERAL MARKET	4 OF 4

DOCUMENT STATUS	P1	RELEASE DATE	2019/08/02 15:55:47

FORMAT: master-tb-prod-A1
TEMPLATE: 1
DATE: 2018/01/18

molex

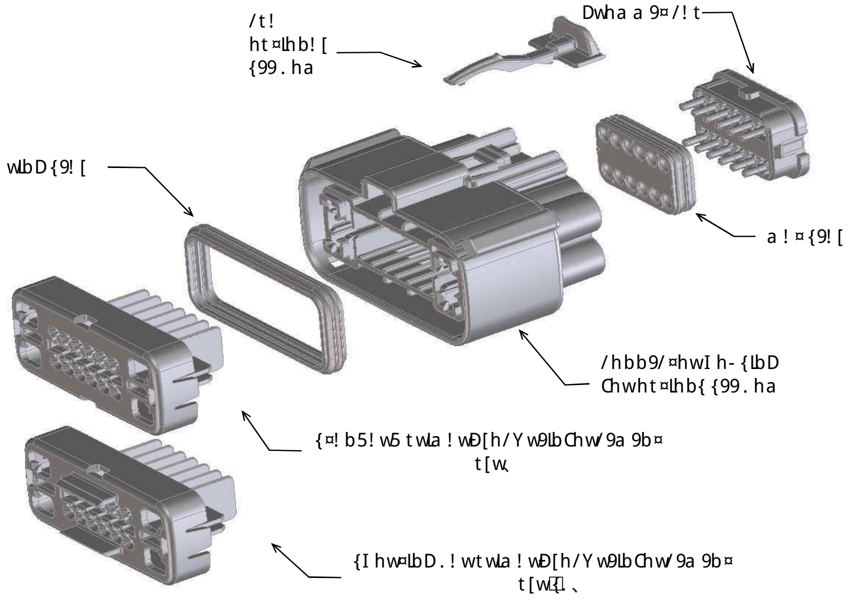

Chw! 55L¤Lhb! [LbChwa ! ¤Lhb {99 {5[わあ ゔ夏ろれ

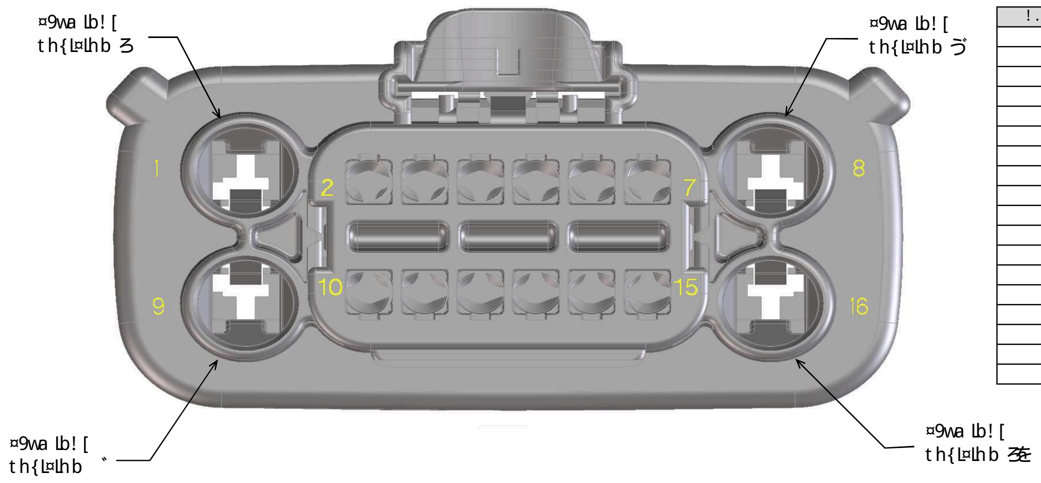

! . . w9¹ L! ¤Lhb	59{/wLt¤Lhb	/h[hw	a ! ¤9wL! [
! ⊡[Y	I h- {LbD¤Y9ÐLbD ht¤Lhb !	. [! /Y	{t{ ⁂Ð[hb DC わ
. [ÐD	I h- {LbD¤Y9ÐLbD ht¤Lhb .	[LÐI ¤ DwÐ	{t{ ⁂Ð[hb DC わ
/ [5ÐD	I h- {LbD¤Y9ÐLbD ht¤Lhb /	5! wY DwÐ	{t{ ⁂Ð[hb DC わ
5 [{ÐD	I h- {LbD¤Y9ÐLbD ht¤Lhb 5	{¤hb9 DwÐ	{t{ ⁂Ð[hb DC わ
! ÐP	I h- {LbD¤Y9ÐLbD ht¤Lhb !	Ð9[[h°	{t{ ⁂Ð[hb DC わ
/ ⊡w	I h- {LbD¤Y9ÐLbD ht¤Lhb /	. wh° b	{t{ ⁂Ð[hb DC わ
5 Ðw	I h- {LbD¤Y9ÐLbD ht¤Lhb 5	Dw99b	{t{ ⁂Ð[hb DC わ
9⊡[Y	I h- {LbD¤Y9ÐLbD ht¤Lhb 9	. [! /Y	{t{ ⁂Ð[hb DC わ
C[ÐD	I h- {LbD¤Y9ÐLbD ht¤Lhb C	[LÐI ¤ DwÐ	{t{ ⁂Ð[hb DC わ
D⊡w	I h- {LbD¤Y9ÐLbD ht¤Lhb D	. wh° b	{t{ ⁂Ð[hb DC わ
D[5ÐD	I h- {LbD¤Y9ÐLbD ht¤Lhb D	5! wY DwÐ	{t{ ⁂Ð[hb DC わ
I ÐP	I h- {LbD¤Y9ÐLbD ht¤Lhb I	Ð9[[h°	{t{ ⁂Ð[hb DC わ
D/	Dwha a 9¤/! t	. [! /Y	{t{ ⁂Ð[hb DC わ
t[w	{¤! b5! w5 t[w	b! ¤- wÐ [	{t{ ⁂Ð[hb DC わ
t[w{[	{I hw¤LbD. ! wt[w	b! ¤- wÐ [	t. ¤ DC ろゑ
/t!	/t!	w95	t. ¤ DC わ
a	a ! ¤{9! [	whÐ [. [- 9	LbI 9w9b¤[Ð[- . wL/! ¤95 {L[L/hb9
w	wLbD {9! [	Dw99b	LbI 9w9b¤[Ð[- . wL/! ¤95 {L[L/hb9

! {{9a . [Ð59{/wLt¤Lhb	! {{9a . [Ðt! w¤ b- a . 9w	/ha thb9b¤						. [h/Y95 ¤9wa Lb! [{																{¤! ¤- {	/ha a 9b¤{	ht¤Lhb! [! ¤¤! ¤/I a 9b¤{ {h[5 {9t9w! ¤9[Ð	
		¤I 9t w9{9b/9 hC! b ! . . w9¹ L! ¤Lhb Lb5L/! ¤9{ ¤I 9t w9{9b/9 hC¤I ! ¤ /ha thb9b¤						/! ¹ L¤Ð° L¤I ! b- a . 9wLb5L/! ¤9{ . [h/Y95 ¤9wa Lb! [th{L¤Lhb /! ¹ L¤Ð° L¤I h- ¤! b- a . 9wLb5L/! ¤9{ ht9b ¤9wa Lb! [th{L¤Lhb																			
		I h- {LbD Y9Ð⁂h[hw	Dwha a 9¤ /! t	t[w	/t!	a ! ¤{9! [	wLbD {9! [	ろ	ゎ	わ	ゐ	ゑ	を	ん	ゔ	゛	ろれ	ろろ	ろゎ	ろわ	ろゐ	ろゑ	ろを			.! /Y{I 9[[° L¤I wL {	.! /Y{I 9[[° L¤I h- ¤ wL {
Y9Ð! ¤[! /Y¤ ⁂ /t!	[illegible]	! ⊡[Y	D/	t[w		a	w																	{! [9! . [9		bh¤! ¹ ! L[! . [9	bh¤! ¹ ! L[! . [9
Y9Ð. ¤[LÐI ¤ DwÐ ⁂ /t!	[illegible]	. [ÐD	D/	t[w		a	w																	{! [9! . [9		bh¤! ¹ ! L[! . [9	bh¤! ¹ ! L[! . [9
Y9Ð/ ¤ wh° b ⁂ /t!	[illegible]	/ ⊡w	D/	t[w		a	w																	bh¤w9/ha a 9b595	{99 [illegible]	bh¤! ¹ ! L[! . [9	bh¤! ¹ ! L[! . [9
Y9Ð5¤Dw99b ⁂ /t!	[illegible]	5 Ðw	D/	t[w		a	w																	bh¤w9/ha a 9b595	{99 [illegible]	bh¤! ¹ ! L[! . [9	bh¤! ¹ ! L[! . [9
Y9Ð! ¤Ð9[[h° ⁂ /t!	[illegible]	! ÐP	D/	t[w		a	w																	{! [9! . [9		bh¤! ¹ ! L[! . [9	bh¤! ¹ ! L[! . [9
Y9Ð! ¤[! /Y¤ ⁂t!	[illegible]	! ⊡[Y	D/	t[w	/t!	a	w																	{! [9! . [9		bh¤! ¹ ! L[! . [9	bh¤! ¹ ! L[! . [9
Y9Ð. ¤[LÐI ¤ DwÐ ⁂t!	[illegible]	. [ÐD	D/	t[w	/t!	a	w																	{! [9! . [9		bh¤! ¹ ! L[! . [9	bh¤! ¹ ! L[! . [9
Y9Ð/ ¤ wh° b ⁂t!	[illegible]	/ ⊡w	D/	t[w	/t!	a	w																	bh¤w9/ha a 9b595	{99 [illegible]	bh¤! ¹ ! L[! . [9	bh¤! ¹ ! L[! . [9
Y9Ð5¤Dw99b ⁂t!	[illegible]	5 Ðw	D/	t[w	/t!	a	w																	bh¤w9/ha a 9b595	{99 [illegible]	bh¤! ¹ ! L[! . [9	bh¤! ¹ ! L[! . [9
Y9Ð! ¤Ð9[[h° ⁂ /t!	[illegible]	! ÐP	D/	t[w		a	w														ろゐ			{! [9! . [9		bh¤! ¹ ! L[! . [9	bh¤! ¹ ! L[! . [9
Y9Ð! ¤[! /Y¤ ⁂ /t!	[illegible]	! ⊡[Y	D/	t[w		a	w		ゎ															{! [9! . [9		bh¤! ¹ ! L[! . [9	bh¤! ¹ ! L[! . [9
Y9Ð. ¤[LÐI ¤ DwÐ ⁂ /t!	[illegible]	. [ÐD	D/	t[w		a	w		ゎ															{! [9! . [9		bh¤! ¹ ! L[! . [9	bh¤! ¹ ! L[! . [9
Y9Ð/ ¤ wh° b ⁂ /t!	[illegible]	/ ⊡w	D/	t[w		a	w		ゎ															bh¤w9/ha a 9b595		bh¤! ¹ ! L[! . [9	bh¤! ¹ ! L[! . [9
Y9Ð5¤Dw99b ⁂ /t!	[illegible]	5 Ðw	D/	t[w		a	w		ゎ															bh¤w9/ha a 9b595		bh¤! ¹ ! L[! . [9	bh¤! ¹ ! L[! . [9
Y9Ð! ¤Ð9[[h° ⁂ /t!	[illegible]	! ÐP	D/	t[w		a	w						を	ん			ろれ	ろろ			ろゐ			{! [9! . [9		bh¤! ¹ ! L[! . [9	bh¤! ¹ ! L[! . [9
Y9Ð! ¤[! /Y¤ ⁂t!	[illegible]	! ⊡[Y	D/	t[w	/t!	a	w		ゎ															{! [9! . [9		bh¤! ¹ ! L[! . [9	bh¤! ¹ ! L[! . [9
Y9Ð. ¤[LÐI ¤ DwÐ ⁂t!	[illegible]	. [ÐD	D/	t[w	/t!	a	w		ゎ															{! [9! . [9		bh¤! ¹ ! L[! . [9	bh¤! ¹ ! L[! . [9
Y9Ð/ ¤ wh° b ⁂t!	[illegible]	/ ⊡w	D/	t[w	/t!	a	w		ゎ															bh¤w9/ha a 9b595		bh¤! ¹ ! L[! . [9	bh¤! ¹ ! L[! . [9
Y9Ð5¤Dw99b ⁂t!	[illegible]	5 Ðw	D/	t[w	/t!	a	w		ゎ															bh¤w9/ha a 9b595		bh¤! ¹ ! L[! . [9	bh¤! ¹ ! L[! . [9
Y9Ð! ¤Ð9[[h° ⁂ /t!	[illegible]	! ÐP	D/	t[w		a	w						を				ろれ	ろろ			ろゐ			{! [9! . [9		bh¤! ¹ ! L[! . [9	bh¤! ¹ ! L[! . [9
Y9Ð! ¤[! /Y¤ ⁂ /t!	[illegible]	! ⊡[Y	D/	t[w		a	w		ゎ													ろゑ		{! [9! . [9		bh¤! ¹ ! L[! . [9	bh¤! ¹ ! L[! . [9
Y9Ð. ¤[LÐI ¤ DwÐ ⁂ /t!	[illegible]	. [ÐD	D/	t[w		a	w		ゎ													ろゑ		{! [9! . [9		bh¤! ¹ ! L[! . [9	bh¤! ¹ ! L[! . [9
Y9Ð/ ¤ wh° b ⁂ /t!	[illegible]	/ ⊡w	D/	t[w		a	w		ゎ													ろゑ		bh¤w9/ha a 9b595		bh¤! ¹ ! L[! . [9	bh¤! ¹ ! L[! . [9
Y9Ð5¤Dw99b ⁂ /t!	[illegible]	5 Ðw	D/	t[w		a	w		ゎ													ろゑ		bh¤w9/ha a 9b595		bh¤! ¹ ! L[! . [9	bh¤! ¹ ! L[! . [9
Y9Ð. ¤[LÐI ¤ DwÐ ⁂ /t!	[illegible]	. [ÐD	D/	t[w		a	w												ろゎ	ろわ	ろゐ			{! [9! . [9		bh¤! ¹ ! L[! . [9	bh¤! ¹ ! L[! . [9
Y9Ð! ¤[! /Y¤ ⁂t!	[illegible]	! ⊡[Y	D/	t[w	/t!	a	w		ゎ													ろゑ		{! [9! . [9		bh¤! ¹ ! L[! . [9	bh¤! ¹ ! L[! . [9
Y9Ð. ¤[LÐI ¤ DwÐ ⁂t!	[illegible]	. [ÐD	D/	t[w	/t!	a	w		ゎ													ろゑ		{! [9! . [9		bh¤! ¹ ! L[! . [9	bh¤! ¹ ! L[! . [9
Y9Ð/ ¤ wh° b ⁂t!	[illegible]	/ ⊡w	D/	t[w	/t!	a	w		ゎ													ろゑ		bh¤w9/ha a 9b595		bh¤! ¹ ! L[! . [9	bh¤! ¹ ! L[! . [9
Y9Ð5¤Dw99b ⁂t!	[illegible]	5 Ðw	D/	t[w	/t!	a	w		ゎ													ろゑ		bh¤w9/ha a 9b595		bh¤! ¹ ! L[! . [9	bh¤! ¹ ! L[! . [9
Y9Ð. ¤[LÐI ¤ DwÐ ⁂ /t!	[illegible]	. [ÐD	D/	t[w		a	w						を	ん			ろれ	ろろ	ろゎ	ろわ	ろゐ			{! [9! . [9		bh¤! ¹ ! L[! . [9	bh¤! ¹ ! L[! . [9
Y9Ð! ¤[! /Y¤ ⁂ /t!	[illegible]	! ⊡[Y	D/	t[w		a	w		ゎ	わ	ゐ	ゑ	を	ん			ろれ	ろろ	ろゎ	ろわ	ろゐ	ろゑ		{! [9! . [9		bh¤! ¹ ! L[! . [9	bh¤! ¹ ! L[! . [9
Y9Ð! ¤[! /Y¤ ⁂ /t!	[illegible]	! ⊡[Y	D/	t[w		a	w		ゎ	わ			を											{! [9! . [9		bh¤! ¹ ! L[! . [9	bh¤! ¹ ! L[! . [9
Y9Ð! ¤[! /Y¤ ⁂ /t!	[illegible]	! ⊡[Y	D/	t[w		a	w			わ			を											{! [9! . [9		bh¤! ¹ ! L[! . [9	bh¤! ¹ ! L[! . [9
Y9Ð! ¤[! /Y¤ ⁂ /t!	[illegible]	! ⊡[Y	D/	t[w		a	w						を											{! [9! . [9		bh¤! ¹ ! L[! . [9	bh¤! ¹ ! L[! . [9
Y9Ð9¤[! /Y¤ ⁂{I w¤. ! w¤ ⁂ /t!	[illegible]	9⊡[Y	D/	t[w{[		a	w																	{! [9! . [9		bh¤! ¹ ! L[! . [9	bh¤! ¹ ! L[! . [9
Y9ÐC¤[LÐI ¤ DwÐ ⁂{I w¤. ! w¤ ⁂ /t!	[illegible]	C[ÐD	D/	t[w{[		a	w																	{! [9! . [9		bh¤! ¹ ! L[! . [9	bh¤! ¹ ! L[! . [9
Y9ÐD¤wh° b ⁂{I w¤. ! w¤ ⁂ /t!	[illegible]	D⊡w	D/	t[w{[		a	w																	{! [9! . [9		bh¤! ¹ ! L[! . [9	bh¤! ¹ ! L[! . [9
Y9ÐI ¤Ð9[[h° ⁂{I w¤. ! w¤ ⁂ /t!	[illegible]	I ÐP	D/	t[w{[		a	w																	{! [9! . [9		bh¤! ¹ ! L[! . [9	bh¤! ¹ ! L[! . [9
Y9ÐI ¤Ð9[[h° ⁂{I w¤. ! w¤ ⁂t!	[illegible]	I ÐP	D/	t[w{[	/t!	a	w												ろゎ	ろわ				{! [9! . [9		bh¤! ¹ ! L[! . [9	bh¤! ¹ ! L[! . [9
Y9ÐI ¤Ð9[[h° ⁂{I w¤. ! w¤ ⁂t!	[illegible]	I ÐP	D/	t[w{[	/t!	a	w		ゎ										ろゎ	ろわ		ろゑ		{! [9! . [9		bh¤! ¹ ! L[! . [9	bh¤! ¹ ! L[! . [9
Y9ÐI ¤Ð9[[h° ⁂{I w¤. ! w¤ ⁂t!	[illegible]	I ÐP	D/	t[w{[	/t!	a	w		ゎ													ろゑ		{! [9! . [9		bh¤! ¹ ! L[! . [9	bh¤! ¹ ! L[! . [9
Y9ÐI ¤Ð9[[h° ⁂{I w¤. ! w¤ ⁂t!	[illegible]	I ÐP	D/	t[w{[	/t!	a	w			わ			を	ん			ろれ	ろろ	ろゎ	ろわ	ろゐ			{! [9! . [9		bh¤! ¹ ! L[! . [9	bh¤! ¹ ! L[! . [9
Y9ÐI ¤Ð9[[h° ⁂{I w¤. ! w¤ ⁂t!	[illegible]	I ÐP	D/	t[w{[	/t!	a	w			わ			を	ん			ろれ	ろろ			ろゐ			{! [9! . [9		bh¤! ¹ ! L[! . [9	bh¤! ¹ ! L[! . [9
Y9ÐI ¤Ð9[[h° ⁂{I w¤. ! w¤ ⁂t!	[illegible]	I ÐP	D/	t[w{[	/t!	a	w																	{! [9! . [9		bh¤! ¹ ! L[! . [9	bh¤! ¹ ! L[! . [9
Y9ÐI ¤Ð9[[h° ⁂{I w¤. ! w¤ ⁂t!	[illegible]	I ÐP	D/	t[w{[	/t!	a	w		ゎ	わ			を	ん			ろれ	ろろ			ろゐ	ろゑ		{! [9! . [9		bh¤! ¹ ! L[! . [9	bh¤! ¹ ! L[! . [9
Y9Ð! ¤[! /Y¤ ⁂ /t!	[illegible]	! ⊡[Y	D/	t[w		a	w							ん						ろわ				{! [9! . [9		bh¤! ¹ ! L[! . [9	bh¤! ¹ ! L[! . [9
Y9Ð! ¤[! /Y¤ ⁂ /t!	[illegible]	! ⊡[Y	D/	t[w		a	w		ゎ	わ			を	ん						ろわ				{! [9! . [9		bh¤! ¹ ! L[! . [9	bh¤! ¹ ! L[! . [9
Y9Ð! ¤[! /Y¤ ⁂ /t!	[illegible]	! ⊡[Y	D/	t[w		a	w						を	ん						ろわ				{! [9! . [9		bh¤! ¹ ! L[! . [9	bh¤! ¹ ! L[! . [9
Y9Ð! ¤[! /Y¤ ⁂ /t!	[illegible]	! ⊡[Y	D/	t[w		a	w		ゎ	わ			を					ろろ						{! [9! . [9		bh¤! ¹ ! L[! . [9	bh¤! ¹ ! L[! . [9
Y9Ð. ¤[LÐI ¤ DwÐ ⁂ /t!	[illegible]	. [ÐD	D/	t[w		a	w				ゐ								ろゎ					{! [9! . [9		bh¤! ¹ ! L[! . [9	bh¤! ¹ ! L[! . [9
Y9Ð! ¤[! /Y¤ ⁂ /t!	[illegible]	! ⊡[Y	D/	t[w		a	w			わ			を						ろゎ					{! [9! . [9		bh¤! ¹ ! L[! . [9	bh¤! ¹ ! L[! . [9
Y9Ð! ¤[! /Y¤ ⁂ /t!	[illegible]	! ⊡[Y	D/	t[w		a	w				ゐ								ろゎ					{! [9! . [9		bh¤! ¹ ! L[! . [9	bh¤! ¹ ! L[! . [9
Y9Ð! ¤[! /Y¤ ⁂ /t!	[illegible]	! ⊡[Y	D/	t[w		a	w		ゎ								ろれ		ろゎ	ろわ	ろゐ	ろゑ		{! [9! . [9		bh¤! ¹ ! L[! . [9	bh¤! ¹ ! L[! . [9
Y9Ð! ¤[! /Y¤ ⁂ /t!	[illegible]	! ⊡[Y	D/	t[w		a	w		ゎ	わ							ろれ		ろゎ	ろわ	ろゐ	ろゑ		{! [9! . [9		bh¤! ¹ ! L[! . [9	bh¤! ¹ ! L[! . [9
Y9Ð! ¤[! /Y¤ ⁂ /t!	[illegible]	! ⊡[Y	D/	t[w		a	w		ゎ		ゐ			ん								ろゑ		{! [9! . [9		bh¤! ¹ ! L[! . [9	bh¤! ¹ ! L[! . [9
Y9Ð! ¤[! /Y¤ ⁂ /t!	[illegible]	! ⊡[Y	D/	t[w		a	w					ゑ	を											{! [9! . [9		bh¤! ¹ ! L[! . [9	bh¤! ¹ ! L[! . [9
Y9Ð! ¤[! /Y¤ ⁂ /t!	[illegible]	! ⊡[Y	D/	t[w		a	w					ゑ	を							ろわ	ろゐ	ろゑ		{! [9! . [9		bh¤! ¹ ! L[! . [9	bh¤! ¹ ! L[! . [9
Y9Ð! ¤[! /Y¤ ⁂ /t!	[illegible]	! ⊡[Y	D/	t[w		a	w						を					ろろ			ろゐ			{! [9! . [9		bh¤! ¹ ! L[! . [9	bh¤! ¹ ! L[! . [9

!{{9a.[Ð59{/wlt¤lhb	!{{9a.[Ðt!w¤ b-a.9w	/ha thb9b¤						.[h/Y95 ¤9wa lb![{																{¤!¤-{	/ha a 9b¤{	ht¤lhb![!¤¤!¤/I a 9b¤{{h[5{9t9wl¤9[Ð	
		¤I 9tw9{9b/9hC!b!..w9¹ L!¤lhb lb5l/!¤9{ ¤I 9tw9{9b/9hC¤I!¤ /ha thb9b¤♔						/!¹l¤Ð° l¤I ! b-a.9wlb5l/!¤9{.[h/Y95 ¤9wa lb![th{l¤lhb /!¹l¤Ð° l¤I h-¤! b-a.9wlb5l/!¤9{ht9b ¤9wa lb![th{l¤lhb																			
		I h-{lbD Y9Ð⚘h[hw	Dwha a 9¤ /!t	t[w	/t!	a!¤{9![	wlbD {9![	ろ	ゎ	わ	ゐ	ゑ	を	ん	ゔ	゛	ろれ	ろろ	ろゎ	ろわ	ろゐ	ろゑ	ろを			.!/Y{I 9[[° l¤I wL{	.!/Y{I 9[[° l¤I h-¤ wL{
Y9Ð!☞[!/Y☞ 㐃/t!	ねあ うゑろ	!⊡[Y	D/	t[w		a	w			ｵ			ぇ				ろｵ	ろぇ	ろｵ.	ろｵ:	ろƌ	ろゑ		{![9!.[9		bh¤!¹!l[!.[9	bh¤!¹!l[!.[9
Y9Ð!☞[!/Y☞ 㐃/t!	ねあ うゑろ	!⊡[Y	D/	t[w		a	w						ぇ				ろｵ	ろぇ	ろｵ.	ろｵ:	ろƌ	ろゑ		{![9!.[9		bh¤!¹!l[!.[9	bh¤!¹!l[!.[9
Y9Ð!☞[!/Y☞ 㐃/t!	ねあ うゑろ	!⊡[Y	D/	t[w		a	w											ろぇ	ろｵ.	ろｵ:	ろƌ	ろゑ		{![9!.[9		bh¤!¹!l[!.[9	bh¤!¹!l[!.[9
Y9Ð.☞[lDI¤Dwl Ð☞ 㐃/t!	ねあ うゑろ	.[ED	D/	t[w		a	w					ゑ								ろｵ:	ろƌ	ろゑ		{![9!.[9		bh¤!¹!l[!.[9	bh¤!¹!l[!.[9
Y9Ð.☞[lDI¤Dwl Ð☞ 㐃/t!	ねあ うゑろ	.[ED	D/	t[w		a	w					ゑ								ろｵ:	ろƌ			{![9!.[9		bh¤!¹!l[!.[9	bh¤!¹!l[!.[9
Y9Ð!☞[!/Y☞ 㐃/t!	ねあ うゑろ	!⊡[Y	D/	t[w		a	w		ｵ.					ん			ろｵ	ろぇ						{![9!.[9		bh¤!¹!l[!.[9	bh¤!¹!l[!.[9
Y9Ð!☞[!/Y☞ 㐃/t!	ねあ うゑろ	!⊡[Y	D/	t[w		a	w		ｵ.					ん						ろｵ:		ろゑ		{![9!.[9		bh¤!¹!l[!.[9	bh¤!¹!l[!.[9
Y9Ð!☞[!/Y☞ 㐃/t!	ねあ うゑろ	!⊡[Y	D/	t[w		a	w			ｵ			ぇ	ん						ろｵ:				{![9!.[9		bh¤!¹!l[!.[9	bh¤!¹!l[!.[9
Y9Ð!☞[!/Y☞ 㐃/t!	ねあ うゑろ	!⊡[Y	D/	t[w		a	w		ｵ.					ん					ろｵ.	ろｵ:	ろƌ	ろゑ		{![9!.[9		bh¤!¹!l[!.[9	bh¤!¹!l[!.[9
Y9Ð!☞[!/Y☞ 㐃/t!	ねあ うゑろ	!⊡[Y	D/	t[w		a	w							ん					ろｵ.	ろｵ:	ろƌ	ろゑ		{![9!.[9		bh¤!¹!l[!.[9	bh¤!¹!l[!.[9
Y9Ð!☞[!/Y☞ 㐃/t!	ねあ うゑろ	!⊡[Y	D/	t[w		a	w			ｵ		ゑ	ぇ					ろぇ				ろゑ		{![9!.[9		bh¤!¹!l[!.[9	bh¤!¹!l[!.[9
Y9Ð!☞[!/Y☞ 㐃/t!	ねあ うゑろ	!⊡[Y	D/	t[w		a	w						ぇ								ろƌ			{![9!.[9		bh¤!¹!l[!.[9	bh¤!¹!l[!.[9
Y9Ð!☞[!/Y☞ 㐃/t!	ねあ うゑろ	!⊡[Y	D/	t[w		a	w		ｵ.		ƌ	ゑ	ぇ	ん			ろｵ	ろぇ	ろｵ.		ろƌ	ろゑ		{![9!.[9		bh¤!¹!l[!.[9	bh¤!¹!l[!.[9
Y9Ð!☞[!/Y☞ 㐃/t!	ねあ うゑろ	!⊡[Y	D/	t[w		a	w		ｵ.	ｵ												ろゑ		{![9!.[9		bh¤!¹!l[!.[9	bh¤!¹!l[!.[9
Y9Ð!☞[!/Y☞ 㐃/t!	ねあ うゑろ	!⊡[Y	D/	t[w		a	w		ｵ.		ƌ			ん			ろｵ	ろぇ		ろｵ:		ろゑ		{![9!.[9		bh¤!¹!l[!.[9	bh¤!¹!l[!.[9
Y9Ð!☞[!/Y☞ 㐃/t!	ねあ うゑろ	!⊡[Y	D/	t[w		a	w		ｵ.	ｵ		ゑ					ろｵ			ろｵ:		ろゑ		{![9!.[9		bh¤!¹!l[!.[9	bh¤!¹!l[!.[9
Y9Ð!☞[!/Y☞ 㐃/t!	ねあ うゑろ	!⊡[Y	D/	t[w		a	w			ｵ			ぇ					ろぇ	ろｵ.	ろｵ:	ろƌ			{![9!.[9		bh¤!¹!l[!.[9	bh¤!¹!l[!.[9
Y9Ð!☞[!/Y☞ 㐃/t!	ねあ うゑろ	!⊡[Y	D/	t[w		a	w												ろｵ.	ろｵ:	ろƌ			{![9!.[9		bh¤!¹!l[!.[9	bh¤!¹!l[!.[9
Y9Ð!☞[!/Y☞ 㐃/t!	ねあ うゑろ	!⊡[Y	D/	t[w		a	w		ｵ.		ƌ											ろゑ		{![9!.[9		bh¤!¹!l[!.[9	bh¤!¹!l[!.[9
Y9Ð!☞[!/Y☞ 㐃/t!	ねあ うゑろ	!⊡[Y	D/	t[w		a	w					ゑ	ぇ	ん										{![9!.[9		bh¤!¹!l[!.[9	bh¤!¹!l[!.[9
Y9Ð!☞[!/Y☞ 㐃/t!	ねあ うゑろ	!⊡[Y	D/	t[w		a	w			ｵ	ƌ	ゑ					ろｵ	ろぇ	ろｵ.	ろｵ:	ろƌ	ろゑ		{![9!.[9		bh¤!¹!l[!.[9	bh¤!¹!l[!.[9
Y9Ð!☞[!/Y☞ 㐃/t!	ねあ うゑろ	!⊡[Y	D/	t[w		a	w					ゑ					ろｵ	ろぇ	ろｵ.	ろｵ:	ろƌ	ろゑ		{![9!.[9		bh¤!¹!l[!.[9	bh¤!¹!l[!.[9
Y9Ð!☞[!/Y☞ 㐃/t!	ねあ うゑろ	!⊡[Y	D/	t[w		a	w										ろｵ	ろぇ	ろｵ.	ろｵ:	ろƌ	ろゑ		{![9!.[9		bh¤!¹!l[!.[9	bh¤!¹!l[!.[9
Y9Ð!☞[!/Y☞ 㐃/t!	ねあ うゑろ	!⊡[Y	D/	t[w		a	w						ぇ	ん										{![9!.[9		bh¤!¹!l[!.[9	bh¤!¹!l[!.[9
Y9Ð!☞[!/Y☞ 㐃/t!	ねあ うゑろ	!⊡[Y	D/	t[w		a	w			ｵ	ƌ	ゑ	ぇ	ん										{![9!.[9		bh¤!¹!l[!.[9	bh¤!¹!l[!.[9
Y9Ð!☞[!/Y☞ 㐃/t!	ねあ うゑろ	!⊡[Y	D/	t[w		a	w			ｵ			ぇ				ろｵ			ろｵ:				{![9!.[9		bh¤!¹!l[!.[9	bh¤!¹!l[!.[9
Y9Ð!☞[!/Y☞ 㐃/t!	ねあ うゑろ	!⊡[Y	D/	t[w		a	w			ｵ			ぇ							ろｵ:		ろゑ		{![9!.[9		bh¤!¹!l[!.[9	bh¤!¹!l[!.[9
Y9Ð.☞[lDI¤Dwl Ð☞ 㐃/t!	ねあ うゑろ	.[ED	D/	t[w		a	w						ぇ				ろｵ	ろぇ	ろｵ.	ろｵ:	ろƌ			{![9!.[9		bh¤!¹!l[!.[9	bh¤!¹!l[!.[9
Y9Ð!☞[!/Y☞ 㐃/t!	ねあ うゑろ	!⊡[Y	D/	t[w		a	w		ｵ.	ｵ	ƌ	ゑ	ぇ				ろｵ	ろぇ	ろｵ.		ろƌ	ろゑ		{![9!.[9		bh¤!¹!l[!.[9	bh¤!¹!l[!.[9
Y9Ð!☞[!/Y☞ 㐃/t!	ねあ うゑろ	!⊡[Y	D/	t[w		a	w		ｵ.	ｵ			ぇ	ん				ろぇ		ろｵ:				{![9!.[9		bh¤!¹!l[!.[9	bh¤!¹!l[!.[9
Y9Ð!☞[!/Y☞ 㐃/t!	ねあ うゑろ	!⊡[Y	D/	t[w		a	w						ぇ							ろｵ:				{![9!.[9		bh¤!¹!l[!.[9	bh¤!¹!l[!.[9
Y9Ð!☞[!/Y☞ 㐃/t!	ねあ うゑろ	!⊡[Y	D/	t[w		a	w						ぇ					ろぇ		ろｵ:	ろƌ			{![9!.[9		bh¤!¹!l[!.[9	bh¤!¹!l[!.[9
Y9Ð!☞[!/Y☞ 㙕t!	ねあ うゑろ	!⊡[Y	D/	t[w	/t!	a	w		ｵ.	ｵ	ƌ	ゑ	ぇ	ん			ろｵ	ろぇ	ろｵ.	ろｵ:	ろƌ	ろゑ		{![9!.[9		bh¤!¹!l[!.[9	bh¤!¹!l[!.[9
Y9Ð!☞[!/Y☞ 㙕t!	ねあ うゑろ	!⊡[Y	D/	t[w	/t!	a	w		ｵ.	ｵ	ƌ	ゑ	ぇ	ん					ろｵ.	ろｵ:	ろƌ	ろゑ		{![9!.[9		bh¤!¹!l[!.[9	bh¤!¹!l[!.[9
Y9Ð!☞[!/Y☞ 㐃/t!	ねあ うゑろ	!⊡[Y	D/	t[w		a	w													ろｵ:	ろƌ			{![9!.[9		bh¤!¹!l[!.[9	bh¤!¹!l[!.[9
Y9Ð!☞[!/Y☞ 㐃/t!	ねあ うゑろ	!⊡[Y	D/	t[w		a	w			ｵ			ぇ					ろぇ	ろｵ.	ろｵ:	ろƌ	ろゑ		{![9!.[9		bh¤!¹!l[!.[9	bh¤!¹!l[!.[9
Y9Ð!☞[!/Y☞ 㐃/t!	ねあ うゑろ	!⊡[Y	D/	t[w		a	w		ｵ.				ぇ	ん				ろぇ	ろｵ.	ろｵ:		ろゑ		{![9!.[9		bh¤!¹!l[!.[9	bh¤!¹!l[!.[9
Y9Ð!☞[!/Y☞ 㐃/t!	ねあ うゑろ	!⊡[Y	D/	t[w		a	w		ｵ.			ゑ	ぇ	ん				ろぇ	ろｵ.	ろｵ:		ろゑ		{![9!.[9		bh¤!¹!l[!.[9	bh¤!¹!l[!.[9
Y9Ð!☞[!/Y☞ 㐃/t!	ねあ うゑろ	!⊡[Y	D/	t[w		a	w		ｵ.					ん			ろｵ	ろぇ	ろｵ.			ろゑ		{![9!.[9		bh¤!¹!l[!.[9	bh¤!¹!l[!.[9
Y9Ð!☞[!/Y☞ 㐃/t!	ねあ うゑろ	!⊡[Y	D/	t[w		a	w						ぇ						ろｵ.		ろƌ	ろゑ		{![9!.[9		bh¤!¹!l[!.[9	bh¤!¹!l[!.[9
Y9Ð!☞[!/Y☞ 㐃/t!	ねあ うゑろ	!⊡[Y	D/	t[w		a	w						ぇ								ろƌ	ろゑ		{![9!.[9		bh¤!¹!l[!.[9	bh¤!¹!l[!.[9
Y9Ð.☞[lDI¤Dwl Ð☞ 㐃/t!	ねあ うゑろ	.[ED	D/	t[w		a	w			ｵ	ƌ	ゑ					ろｵ	ろぇ	ろｵ.	ろｵ:	ろƌ	ろゑ		{![9!.[9		bh¤!¹!l[!.[9	bh¤!¹!l[!.[9
Y9Ð.☞[lDI¤Dwl Ð☞ 㐃/t!	ねあ うゑろ	.[ED	D/	t[w		a	w			ｵ	ƌ	ゑ	ぇ	ん										{![9!.[9		bh¤!¹!l[!.[9	bh¤!¹!l[!.[9
Y9Ð.☞[lDI¤Dwl Ð☞ 㐃/t!	ねあ うゑろ	.[ED	D/	t[w		a	w					ゑ	ぇ	ん										{![9!.[9		bh¤!¹!l[!.[9	bh¤!¹!l[!.[9
Y9Ð.☞[lDI¤Dwl Ð☞ 㐃/t!	ねあ うゑろ	.[ED	D/	t[w		a	w					ゑ					ろｵ	ろぇ	ろｵ.	ろｵ:	ろƌ	ろゑ		{![9!.[9		bh¤!¹!l[!.[9	bh¤!¹!l[!.[9
Y9Ð!☞[!/Y☞ 㐃/t!	ねあ うゑろ	!⊡[Y	D/	t[w		a	w						ぇ							ろｵ:	ろƌ	ろゑ		{![9!.[9		bh¤!¹!l[!.[9	bh¤!¹!l[!.[9
Y9Ð!☞[!/Y☞ 㐃/t!	ねあ うゑろ	!⊡[Y	D/	t[w		a	w						ぇ						ろｵ.	ろｵ:	ろƌ	ろゑ		{![9!.[9		bh¤!¹!l[!.[9	bh¤!¹!l[!.[9
Y9Ð!☞[!/Y☞ 㙕t!	ねあ うゑろ	!⊡[Y	D/	t[w	/t!	a	w											ろぇ						{![9!.[9		bh¤!¹!l[!.[9	bh¤!¹!l[!.[9
Y9Ð!☞[!/Y☞ 㙕t!	ねあ うゑろ	!⊡[Y	D/	t[w	/t!	a	w						ぇ	ん										{![9!.[9		bh¤!¹!l[!.[9	bh¤!¹!l[!.[9
Y9Ð!☞[!/Y☞ 㙕t!	ねあ うゑろ	!⊡[Y	D/	t[w	/t!	a	w			ｵ							ろｵ							{![9!.[9		bh¤!¹!l[!.[9	bh¤!¹!l[!.[9
Y9Ð!☞[!/Y☞ 㙕t!	ねあ うゑろ	!⊡[Y	D/	t[w	/t!	a	w		ｵ.	ｵ							ろｵ							{![9!.[9		bh¤!¹!l[!.[9	bh¤!¹!l[!.[9
Y9Ð!☞[!/Y☞ 㙕t!	ねあ うゑろ	!⊡[Y	D/	t[w	/t!	a	w						ぇ	ん				ろぇ						{![9!.[9		bh¤!¹!l[!.[9	bh¤!¹!l[!.[9
Y9Ð!☞[!/Y☞ 㙕t!	ねあ うゑろ	!⊡[Y	D/	t[w	/t!	a	w					ゑ	ぇ	ん						ろｵ:	ろƌ	ろゑ		{![9!.[9		bh¤!¹!l[!.[9	bh¤!¹!l[!.[9
Y9Ð!☞[!/Y☞ 㙕t!	ねあ うゑろ	!⊡[Y	D/	t[w	/t!	a	w		ｵ.			ゑ	ぇ	ん			ろｵ			ろｵ:	ろƌ	ろゑ		{![9!.[9		bh¤!¹!l[!.[9	bh¤!¹!l[!.[9
Y9Ð!☞[!/Y☞ 㙕t!	ねあ うゑろ	!⊡[Y	D/	t[w	/t!	a	w		ｵ.	ｵ	ƌ	ゑ	ぇ	ん				ろぇ	ろｵ.	ろｵ:	ろƌ	ろゑ		{![9!.[9		bh¤!¹!l[!.[9	bh¤!¹!l[!.[9
Y9Ð!☞[!/Y☞ 㙕t!	ねあ うゑろ	!⊡[Y	D/	t[w	/t!	a	w		ｵ.	ｵ	ƌ	ゑ						ろぇ	ろｵ.	ろｵ:	ろƌ	ろゑ		{![9!.[9		bh¤!¹!l[!.[9	bh¤!¹!l[!.[9
Y9Ð!☞[!/Y☞ 㙕t!	ねあ うゑろ	!⊡[Y	D/	t[w	/t!	a	w		ｵ.	ｵ	ƌ	ゑ							ろｵ.	ろｵ:	ろƌ	ろゑ		{![9!.[9		bh¤!¹!l[!.[9	bh¤!¹!l[!.[9
Y9Ð!☞[!/Y☞ 㐃/t!	ねあ うゑろ	!⊡[Y	D/	t[w		a	w		ｵ.					ん			ろｵ	ろぇ		ろｵ:		ろゑ		{![9!.[9		bh¤!¹!l[!.[9	bh¤!¹!l[!.[9
Y9Ð!☞[!/Y☞ 㐃/t!	ねあ うゑろ	!⊡[Y	D/	t[w		a	w			ｵ	ƌ			ん			ろｵ	ろぇ		ろｵ:	ろƌ	ろゑ		{![9!.[9		bh¤!¹!l[!.[9	bh¤!¹!l[!.[9
Y9Ð!☞[!/Y☞ 㐃/t!	ねあ うゑろ	!⊡[Y	D/	t[w		a	w													ろｵ:	ろƌ	ろゑ		{![9!.[9		bh¤!¹!l[!.[9	bh¤!¹!l[!.[9
Y9Ð!☞[!/Y☞ 㐃/t!	ねあ うゑろ	!⊡[Y	D/	t[w		a	w												ろｵ.	ろｵ:	ろƌ	ろゑ		{![9!.[9		bh¤!¹!l[!.[9	bh¤!¹!l[!.[9
Y9Ð!☞[!/Y☞ 㙕t!	ねあ うゑろ	!⊡[Y	D/	t[w	/t!	a	w												ろｵ.					{![9!.[9		bh¤!¹!l[!.[9	bh¤!¹!l[!.[9
Y9Ð!☞[!/Y☞ 㙕t!	ねあ うゑろ	!⊡[Y	D/	t[w	/t!	a	w		ｵ.		ƌ								ろｵ.					{![9!.[9		bh¤!¹!l[!.[9	bh¤!¹!l[!.[9
Y9Ð!☞[!/Y☞ 㙕t!	ねあ うゑろ	!⊡[Y	D/	t[w	/t!	a	w					ゑ					ろｵ		ろｵ.					{![9!.[9		bh¤!¹!l[!.[9	bh¤!¹!l[!.[9
Y9Ð!☞[!/Y☞ 㐃/t!	ねあ うゑろ	!⊡[Y	D/	t[w		a	w			ｵ	ƌ		ぇ	ん			ろｵ	ろぇ		ろｵ:	ろƌ	ろゑ		{![9!.[9		bh¤!¹!l[!.[9	bh¤!¹!l[!.[9
Y9Ð!☞[!/Y☞ 㐃/t!	ねあ うゑろ	!⊡[Y	D/	t[w		a	w											ろぇ		ろｵ:	ろƌ	ろゑ		{![9!.[9		bh¤!¹!l[!.[9	bh¤!¹!l[!.[9
Y9Ð!☞[!/Y☞ 㙕t!	ねあ うゑろ	!⊡[Y	D/	t[w	/t!	a	w				ƌ			ん										{![9!.[9		bh¤!¹!l[!.[9	bh¤!¹!l[!.[9
Y9Ð.☞[lDI¤Dwl Ð☞ 㐃/t!	ねあ うゑろ	.[ED	D/	t[w		a	w						ぇ	ん										{![9!.[9		bh¤!¹!l[!.[9	bh¤!¹!l[!.[9
Y9Ð.☞[lDI¤Dwl Ð☞ 㐃/t!	ねあ うゑろ	.[ED	D/	t[w		a	w										ろｵ	ろぇ	ろｵ.	ろｵ:	ろƌ	ろゑ		{![9!.[9		bh¤!¹!l[!.[9	bh¤!¹!l[!.[9
Y9Ð!☞[!/Y☞ 㐃/t!	ねあ うゑろ	!⊡[Y	D/	t[w		a	w						ぇ						ろｵ.	ろｵ:	ろƌ			{![9!.[9		bh¤!¹!l[!.[9	bh¤!¹!l[!.[9
Y9Ð!☞[!/Y☞ 㙕t!	ねあ うゑろ	!⊡[Y	D/	t[w	/t!	a	w		ｵ.	ｵ		ゑ	ぇ				ろｵ	ろぇ	ろｵ.	ろｵ:	ろƌ	ろゑ		{![9!.[9		bh¤!¹!l[!.[9	bh¤!¹!l[!.[9
Y9ÐI☞Ð9[[h° ☞ 㙕I w¤.!w☞ 㙕t!	ねあ うゑろ	I ÐP	D/	t[w{l	/t!	a	w		ｵ.	ｵ			ぇ	ん			ろｵ	ろぇ	ろｵ.	ろｵ:	ろƌ	ろゑ		{![9!.[9		bh¤!¹!l[!.[9	bh¤!¹!l[!.[9
Y9ÐI☞Ð9[[h° ☞ 㙕I w¤.!w☞ 㙕t!	ねあ うゑろ	I ÐP	D/	t[w{l	/t!	a	w		ｵ.	ｵ			ぇ	ん					ろｵ.	ろｵ:	ろƌ			{![9!.[9		bh¤!¹!l[!.[9	bh¤!¹!l[!.[9
Y9ÐI☞Ð9[[h° ☞ 㙕I w¤.!w☞ 㙕t!	ねあ うゑろ	I ÐP	D/	t[w{l	/t!	a	w		ｵ.	ｵ									ろｵ.	ろｵ:	ろƌ	ろゑ		{![9!.[9		bh¤!¹!l[!.[9	bh¤!¹!l[!.[9
Y9ÐI☞Ð9[[h° ☞ 㙕I w¤.!w☞ 㙕t!	ねあ うゑろ	I ÐP	D/	t[w{l	/t!	a	w		ｵ.	ｵ			ぇ	ん					ろｵ.	ろｵ:	ろƌ	ろゑ		{![9!.[9		bh¤!¹!l[!.[9	bh¤!¹!l[!.[9
Y9ÐI☞Ð9[[h° ☞ 㙕I w¤.!w☞ 㙕t!	ねあ うゑろ	I ÐP	D/	t[w{l	/t!	a	w		ｵ.	ｵ							ろｵ	ろぇ	ろｵ.	ろｵ:	ろƌ	ろゑ		{![9!.[9		bh¤!¹!l[!.[9	bh¤!¹!l[!.[9
Y9Ð!☞[!/Y☞ 㐃/t!	ねあ うゑろ	!⊡[Y	D/	t[w		a	w			ｵ														{![9!.[9		bh¤!¹!l[!.[9	bh¤!¹!l[!.[9
Y9Ð!☞[!/Y☞ 㙕t!	ねあ うゑろ	!⊡[Y	D/	t[w	/t!	a	w		ｵ.		ƌ	ゑ					ろｵ		ろｵ.					{![9!.[9		bh¤!¹!l[!.[9	bh¤!¹!l[!.[9
Y9Ð!☞[!/Y☞ 㐃/t!	ねあ うゑろ	!⊡[Y	D/	t[w		a	w			ｵ			ぇ	ん						ろｵ:		ろゑ		{![9!.[9		bh¤!¹!l[!.[9	bh¤!¹!l[!.[9
Y9Ð!☞[!/Y☞ 㐃/t!	ねあ うゑろ	!⊡[Y	D/	t[w		a	w						ぇ							ろｵ:		ろゑ		{![9!.[9		bh¤!¹!l[!.[9	bh¤!¹!l[!.[9
Y9Ð9☞[!/Y☞ 㙕I w¤.!w☞ 㐃/t!	ねあ うゑろ	9⊡[Y	D/	t[w{l		a	w																	{![9!.[9		bh¤!¹!l[!.[9	bh¤!¹!l[!.[9
Y9ÐC☞[lDI¤Dwl Ð☞ 㙕I w¤.!w☞ 㐃/t!	ねあ うゑろ	C[ED	D/	t[w{l		a	w																	{![9!.[9		bh¤!¹!l[!.[9	bh¤!¹!l[!.[9
Y9ÐD☞wh° b☞ 㙕I w¤.!w☞ 㐃/t!	ねあ うゑろ	D⊡w	D/	t[w{l		a	w																	{![9!.[9		bh¤!¹!l[!.[9	bh¤!¹!l[!.[9
Y9ÐI☞Ð9[[h° ☞ 㙕I w¤.!w☞ 㐃/t!	ねあ うゑろ	I ÐP	D/	t[w{l		a	w																	{![9!.[9		bh¤!¹!l[!.[9	bh¤!¹!l[!.[9
Y9ÐI☞Ð9[[h° ☞ 㙕I w¤.!w☞ 㙕t!	ねあ うゑろ	I ÐP	D/	t[w{l	/t!	a	w												ろｵ.	ろｵ:				{![9!.[9		bh¤!¹!l[!.[9	bh¤!¹!l[!.[9
Y9ÐI☞Ð9[[h° ☞ 㙕I w¤.!w☞ 㙕t!	ねあ うゑろ	I ÐP	D/	t[w{l	/t!	a	w		ｵ.										ろｵ.	ろｵ:		ろゑ		{![9!.[9		bh¤!¹!l[!.[9	bh¤!¹!l[!.[9
Y9ÐI☞Ð9[[h° ☞ 㙕I w¤.!w☞ 㙕t!	ねあ うゑろ	I ÐP	D/	t[w{l	/t!	a	w		ｵ.													ろゑ		{![9!.[9		bh¤!¹!l[!.[9	bh¤!¹!l[!.[9
Y9ÐI☞Ð9[[h° ☞ 㙕I w¤.!w☞ 㙕t!	ねあ うゑろ	I ÐP	D/	t[w{l	/t!	a	w			ｵ			ぇ	ん			ろｵ	ろぇ	ろｵ.	ろｵ:	ろƌ			{![9!.[9		bh¤!¹!l[!.[9	bh¤!¹!l[!.[9
Y9ÐI☞Ð9[[h° ☞ 㙕I w¤.!w☞ 㙕t!	ねあ うゑろ	I ÐP	D/	t[w{l	/t!	a	w			ｵ			ぇ	ん			ろｵ	ろぇ			ろƌ			{![9!.[9		bh¤!¹!l[!.[9	bh¤!¹!l[!.[9
Y9ÐI☞Ð9[[h° ☞ 㙕I w¤.!w☞ 㙕t!	ねあ うゑろ	I ÐP	D/	t[w{l	/t!	a	w																	{![9!.[9		bh¤!¹!l[!.[9	bh¤!¹!l[!.[9

molex

a ÆZ3ゑれZ3を° !ÐIÐ.wŁ5 w9/9t¤!/[9{9![95!{{9a.[Ða!¤{9![° Ł¤Ih-¤/[Łt{[h¤☞ゎ5Ï I/!¹Ł¤Ł9{ht9b、 .ha !b5 tŁb h-¤{I99¤

!{{9a.[Ð59{/wŁt¤Łhb	!{{9a.[Ðt!w¤ b-a.9w	/hathb9b¤ ¤I9tw9{9b/9hC!b!..w9¹Ł!¤Łhb Łb5Ł/!¤9{ ¤I9tw9{9b/9hC¤I!¤ /hathb9b¤♔						.[h/Y95 ¤9wa Łb![{ /!¹Ł¤Ð° Ł¤I ! b-a.9wŁb5Ł/!¤9{.[h/Y95 ¤9wa Łb![th{Ł¤Łhb /!¹Ł¤Ð° Ł¤Ih-¤! b-a.9wŁb5Ł/!¤9{ht9b ¤9wa Łb![th{Ł¤Łhb																{¤!¤-{	/haa9b¤{	ht¤Łhb![!¤¤!¤/Ia9b¤{{h[5{9t9W¤9[Ð	
		Ih-{ŁbD Y9Ð¥h[hw	Dwhaa9¤ /!t	t[w	/t!	a!¤{9![	wŁbD {9![	ろ	ゎ	わ	ゐ	ゑ	を	ん	ゔ	゛	ろれ	ろろ	ろゎ	ろわ	ろゐ	ろゑ	ろを			.!/Y{I9[[° Ł¤I wŁ{	.!/Y{I9[[° Ł¤Ih-¤ wŁ{
Y9ÐI¤Ð9[[h° ¤ Ł{Iw¤.!w¤ Łt!	[illegible]	IÐ°	D/	t[w{[	/t!	a	w		ゎ	わ			を	ん			ろれ	ろろ			ろゐ	ろゑ		{![9!.[9		bh¤!¹!Ł[!.[9	bh¤!¹!Ł[!.[9
Y9Ð!¤[!/Y¤ Łh /t!	[illegible]	!⊡[Y	D/	t[w		a	w							ん			ろれ	ろろ						{![9!.[9		bh¤!¹!Ł[!.[9	bh¤!¹!Ł[!.[9
Y9Ð!¤[!/Y¤ Łt!	[illegible]	!⊡[Y	D/	t[w	/t!	a	w		ゎ								ろれ	ろろ	ろゎ	ろわ	ろゐ			{![9!.[9		bh¤!¹!Ł[!.[9	bh¤!¹!Ł[!.[9
Y9Ð!¤[!/Y¤ Łt!	[illegible]	!⊡[Y	D/	t[w	/t!	a	w		ゎ								ろれ	ろろ	ろゎ	ろわ				{![9!.[9		bh¤!¹!Ł[!.[9	bh¤!¹!Ł[!.[9
Y9Ð!¤[!/Y¤ Łt!	[illegible]	!⊡[Y	D/	t[w	/t!	a	w		ゎ								ろれ	ろろ						{![9!.[9		bh¤!¹!Ł[!.[9	bh¤!¹!Ł[!.[9
Y9Ð!¤[!/Y¤ Łt!	[illegible]	!⊡[Y	D/	t[w	/t!	a	w										ろれ	ろろ	ろゎ	ろわ				{![9!.[9		bh¤!¹!Ł[!.[9	bh¤!¹!Ł[!.[9
Y9Ð!¤[!/Y¤ Łh /t!	[illegible]	!⊡[Y	D/	t[w		a	w			わ	ゐ	ゑ	を	ん			ろれ	ろろ	ろゎ	ろわ	ろゐ			{![9!.[9		bh¤!¹!Ł[!.[9	bh¤!¹!Ł[!.[9
Y9Ð!¤[!/Y¤ Łh /t!	[illegible]	!⊡[Y	D/	t[w		a	w				ゐ	ゑ	を	ん			ろれ	ろろ	ろゎ	ろわ	ろゐ			{![9!.[9		bh¤!¹!Ł[!.[9	bh¤!¹!Ł[!.[9
Y9Ð!¤[!/Y¤ Łh /t!	[illegible]	!⊡[Y	D/	t[w		a	w			わ	ゐ			ん			ろれ	ろろ			ろゐ			{![9!.[9		bh¤!¹!Ł[!.[9	bh¤!¹!Ł[!.[9
Y9Ð!¤[!/Y¤ Łh /t!	[illegible]	!⊡[Y	D/	t[w		a	w			わ	ゐ			ん			ろれ	ろろ	ろゎ	ろわ	ろゐ	ろゑ		{![9!.[9		bh¤!¹!Ł[!.[9	bh¤!¹!Ł[!.[9
Y9Ð!¤[!/Y¤ Łh /t!	[illegible]	!⊡[Y	D/	t[w		a	w		ゎ	わ	ゐ	ゑ	を				ろれ	ろろ	ろゎ	ろわ	ろゐ	ろゑ		{![9!.[9		bh¤!¹!Ł[!.[9	bh¤!¹!Ł[!.[9
Y9Ð!¤[!/Y¤ Łh /t!	[illegible]	!⊡[Y	D/	t[w		a	w			わ	ゐ		を	ん			ろれ	ろろ	ろゎ	ろわ	ろゐ	ろゑ		{![9!.[9		bh¤!¹!Ł[!.[9	bh¤!¹!Ł[!.[9
Y9Ð!¤[!/Y¤ Łh /t!	[illegible]	!⊡[Y	D/	t[w		a	w			わ							ろれ	ろろ		ろわ	ろゐ	ろゑ		{![9!.[9		bh¤!¹!Ł[!.[9	bh¤!¹!Ł[!.[9
Y9Ð!¤[!/Y¤ Łh /t!	[illegible]	!⊡[Y	D/	t[w		a	w		ゎ		ゐ		を				ろれ		ろゎ	ろわ				{![9!.[9		bh¤!¹!Ł[!.[9	bh¤!¹!Ł[!.[9
Y9Ð!¤[!/Y¤ Łh /t!	[illegible]	!⊡[Y	D/	t[w		a	w		ゎ	わ	ゐ		を	ん			ろれ	ろろ	ろゎ	ろわ	ろゐ	ろゑ		{![9!.[9		bh¤!¹!Ł[!.[9	bh¤!¹!Ł[!.[9
Y9Ð!¤[!/Y¤ Łh /t!	[illegible]	!⊡[Y	D/	t[w		a	w		ゎ				を	ん			ろれ	ろろ	ろゎ	ろわ	ろゐ	ろゑ		{![9!.[9		bh¤!¹!Ł[!.[9	bh¤!¹!Ł[!.[9
Y9Ð!¤[!/Y¤ Łh /t!	[illegible]	!⊡[Y	D/	t[w		a	w		ゎ	わ														{![9!.[9		bh¤!¹!Ł[!.[9	bh¤!¹!Ł[!.[9
Y9Ð!¤[!/Y¤ Łt!	[illegible]	!⊡[Y	D/	t[w	/t!	a	w			わ														{![9!.[9		bh¤!¹!Ł[!.[9	bh¤!¹!Ł[!.[9
Y9Ð!¤[!/Y¤ Łh /t!	[illegible]	!⊡[Y	D/	t[w		a	w				ゐ	ゑ								ろわ				{![9!.[9		bh¤!¹!Ł[!.[9	bh¤!¹!Ł[!.[9
Y9Ð!¤[!/Y¤ Łh /t!	[illegible]	!⊡[Y	D/	t[w		a	w						を	ん			ろれ	ろろ	ろゎ	ろわ	ろゐ	ろゑ		{![9!.[9		bh¤!¹!Ł[!.[9	bh¤!¹!Ł[!.[9
Y9Ð!¤[!/Y¤ Łh /t!	[illegible]	!⊡[Y	D/	t[w		a	w		ゎ			ゑ	を				ろれ	ろろ	ろゎ	ろわ		ろゑ		{![9!.[9		bh¤!¹!Ł[!.[9	bh¤!¹!Ł[!.[9
Y9Ð!¤[!/Y¤ Łh /t!	[illegible]	!⊡[Y	D/	t[w		a	w		ゎ					ん			ろれ	ろろ	ろゎ	ろわ	ろゐ	ろゑ		{![9!.[9		bh¤!¹!Ł[!.[9	bh¤!¹!Ł[!.[9
Y9Ð!¤[!/Y¤ Łt!	[illegible]	!⊡[Y	D/	t[w	/t!	a	w		ゎ			ゑ	を				ろれ				ろゐ	ろゑ		{![9!.[9		bh¤!¹!Ł[!.[9	bh¤!¹!Ł[!.[9
Y9Ð!¤[!/Y¤ Łt!	[illegible]	!⊡[Y	D/	t[w	/t!	a	w					ゑ	を								ろゐ	ろゑ		{![9!.[9		bh¤!¹!Ł[!.[9	bh¤!¹!Ł[!.[9
Y9Ð!¤[!/Y¤ Łh /t!	[illegible]	!⊡[Y	D/	t[w		a	w				ゐ							ろろ		ろわ	ろゐ			{![9!.[9		bh¤!¹!Ł[!.[9	bh¤!¹!Ł[!.[9
Y9Ð!¤[!/Y¤ Łh /t!	[illegible]	!⊡[Y	D/	t[w		a	w		ゎ		ゐ	ゑ					ろれ		ろゎ		ろゐ	ろゑ		{![9!.[9		bh¤!¹!Ł[!.[9	bh¤!¹!Ł[!.[9
Y9Ð!¤[!/Y¤ Łh /t!	[illegible]	!⊡[Y	D/	t[w		a	w					ゑ										ろゑ		{![9!.[9		bh¤!¹!Ł[!.[9	bh¤!¹!Ł[!.[9
Y9Ð!¤[!/Y¤ Łh /t!	[illegible]	!⊡[Y	D/	t[w		a	w			わ	ゐ									ろわ		ろゑ		{![9!.[9		bh¤!¹!Ł[!.[9	bh¤!¹!Ł[!.[9
Y9Ð!¤[!/Y¤ Łh /t!	[illegible]	!⊡[Y	D/	t[w		a	w				ゐ									ろわ		ろゑ		{![9!.[9		bh¤!¹!Ł[!.[9	bh¤!¹!Ł[!.[9
Y9Ð!¤[!/Y¤ Łh /t!	[illegible]	!⊡[Y	D/	t[w		a	w				ゐ									ろわ				{![9!.[9		bh¤!¹!Ł[!.[9	bh¤!¹!Ł[!.[9
Y9Ð!¤[!/Y¤ Łh /t!	[illegible]	!⊡[Y	D/	t[w		a	w		ゎ					ん			ろれ	ろろ	ろゎ	ろわ				{![9!.[9		bh¤!¹!Ł[!.[9	bh¤!¹!Ł[!.[9
Y9Ð!¤[!/Y¤ Łh /t!	[illegible]	!⊡[Y	D/	t[w		a	w				ゐ	ゑ									ろゐ			{![9!.[9		bh¤!¹!Ł[!.[9	bh¤!¹!Ł[!.[9
Y9Ð!¤[!/Y¤ Łh /t!	[illegible]	!⊡[Y	D/	t[w		a	w						を				ろれ	ろろ			ろゐ			{![9!.[9		bh¤!¹!Ł[!.[9	bh¤!¹!Ł[!.[9
Y9Ð.¤[ŁÐI¤DwŁÐ¤ Łh /t!	[illegible]	.⊡D	D/	t[w		a	w					ゑ	を	ん			ろれ	ろろ	ろゎ	ろわ	ろゐ	ろゑ		{![9!.[9		bh¤!¹!Ł[!.[9	bh¤!¹!Ł[!.[9
Y9Ð!¤[!/Y¤ Łh /t!	[illegible]	!⊡[Y	D/	t[w		a	w		ゎ		ゐ							ろろ		ろわ	ろゐ			{![9!.[9		bh¤!¹!Ł[!.[9	bh¤!¹!Ł[!.[9
Y9Ð!¤[!/Y¤ Łh /t!	[illegible]	!⊡[Y	D/	t[w		a	w			わ			を					ろろ				ろゑ		{![9!.[9		bh¤!¹!Ł[!.[9	bh¤!¹!Ł[!.[9
Y9Ð!¤[!/Y¤ Łh /t!	[illegible]	!⊡[Y	D/	t[w		a	w															ろゑ		{![9!.[9		bh¤!¹!Ł[!.[9	bh¤!¹!Ł[!.[9
Y9Ð!¤[!/Y¤ Łh /t!	[illegible]	!⊡[Y	D/	t[w		a	w				ゐ	ゑ									ろゐ	ろゑ		{![9!.[9		bh¤!¹!Ł[!.[9	bh¤!¹!Ł[!.[9
Y9Ð!¤[!/Y¤ Łh /t!	[illegible]	!⊡[Y	D/	t[w		a	w														ろゐ			{![9!.[9		bh¤!¹!Ł[!.[9	bh¤!¹!Ł[!.[9
Y9Ð!¤[!/Y¤ Łt!	[illegible]	!⊡[Y	D/	t[w	/t!	a	w			わ	ゐ	ゑ	を	ん			ろれ	ろろ	ろゎ	ろわ	ろゐ			{![9!.[9		bh¤!¹!Ł[!.[9	bh¤!¹!Ł[!.[9
Y9Ð!¤[!/Y¤ Łt!	[illegible]	!⊡[Y	D/	t[w	/t!	a	w				ゐ	ゑ	を	ん			ろれ	ろろ	ろゎ	ろわ	ろゐ			{![9!.[9		bh¤!¹!Ł[!.[9	bh¤!¹!Ł[!.[9
Y9Ð!¤[!/Y¤ Łh /t!	[illegible]	!⊡[Y	D/	t[w		a	w		ゎ									ろろ			ろゐ	ろゑ		{![9!.[9		bh¤!¹!Ł[!.[9	bh¤!¹!Ł[!.[9
Y9Ð!¤[!/Y¤ Łh /t!	[illegible]	!⊡[Y	D/	t[w		a	w				ゐ	ゑ							ろゎ					{![9!.[9		bh¤!¹!Ł[!.[9	bh¤!¹!Ł[!.[9
Y9Ð!¤[!/Y¤ Łh /t!	[illegible]	!⊡[Y	D/	t[w		a	w				ゐ	ゑ							ろゎ			ろゑ		{![9!.[9		bh¤!¹!Ł[!.[9	bh¤!¹!Ł[!.[9
Y9Ð!¤[!/Y¤ Łh /t!	[illegible]	!⊡[Y	D/	t[w		a	w			わ								ろろ				ろゑ		{![9!.[9		bh¤!¹!Ł[!.[9	bh¤!¹!Ł[!.[9
Y9Ð!¤[!/Y¤ Łt!	[illegible]	!⊡[Y	D/	t[w	/t!	a	w			わ	ゐ	ゑ	を				ろれ	ろろ		ろわ				{![9!.[9		bh¤!¹!Ł[!.[9	bh¤!¹!Ł[!.[9
Y9Ð!¤[!/Y¤ Łh /t!	[illegible]	!⊡[Y	D/	t[w		a	w						を	ん			ろれ	ろろ			ろゐ			{![9!.[9		bh¤!¹!Ł[!.[9	bh¤!¹!Ł[!.[9
Y9Ð!¤[!/Y¤ Łh /t!	[illegible]	!⊡[Y	D/	t[w		a	w		ゎ				を					ろろ			ろゐ	ろゑ		{![9!.[9		bh¤!¹!Ł[!.[9	bh¤!¹!Ł[!.[9
Y9Ð!¤[!/Y¤ Łh /t!	[illegible]	!⊡[Y	D/	t[w		a	w		ゎ		ゐ									ろわ		ろゑ		{![9!.[9		bh¤!¹!Ł[!.[9	bh¤!¹!Ł[!.[9
Y9Ð!¤[!/Y¤ Łh /t!	[illegible]	!⊡[Y	D/	t[w		a	w			わ	ゐ	ゑ		ん								ろゑ		{![9!.[9		bh¤!¹!Ł[!.[9	bh¤!¹!Ł[!.[9
Y9Ð!¤[!/Y¤ Łh /t!	[illegible]	!⊡[Y	D/	t[w		a	w			わ	ゐ						ろれ	ろろ		ろわ	ろゐ	ろゑ		{![9!.[9		bh¤!¹!Ł[!.[9	bh¤!¹!Ł[!.[9
Y9Ð!¤[!/Y¤ Łt!	[illegible]	!⊡[Y	D/	t[w	/t!	a	w		ゎ		ゐ	ゑ					ろれ		ろゎ	ろわ				{![9!.[9		bh¤!¹!Ł[!.[9	bh¤!¹!Ł[!.[9
Y9Ð!¤[!/Y¤ Łt!	[illegible]	!⊡[Y	D/	t[w	/t!	a	w		ゎ		ゐ								ろゎ	ろわ				{![9!.[9		bh¤!¹!Ł[!.[9	bh¤!¹!Ł[!.[9
Y9Ð!¤[!/Y¤ Łh /t!	[illegible]	!⊡[Y	D/	t[w		a	w		ゎ				を						ろゎ	ろわ	ろゐ	ろゑ		{![9!.[9		bh¤!¹!Ł[!.[9	bh¤!¹!Ł[!.[9
Y9Ð!¤[!/Y¤ Łh /t!	[illegible]	!⊡[Y	D/	t[w		a	w					ゑ	を	ん			ろれ	ろろ	ろゎ	ろわ	ろゐ	ろゑ		{![9!.[9		bh¤!¹!Ł[!.[9	bh¤!¹!Ł[!.[9
Y9Ð!¤[!/Y¤ Łh /t!	[illegible]	!⊡[Y	D/	t[w		a	w		ゎ			ゑ						ろろ	ろゎ	ろわ		ろゑ		{![9!.[9		bh¤!¹!Ł[!.[9	bh¤!¹!Ł[!.[9
Y9Ð!¤[!/Y¤ Łh /t!	[illegible]	!⊡[Y	D/	t[w		a	w		ゎ			ゑ						ろろ		ろわ		ろゑ		{![9!.[9		bh¤!¹!Ł[!.[9	bh¤!¹!Ł[!.[9
Y9Ð!¤[!/Y¤ Łh /t!	[illegible]	!⊡[Y	D/	t[w		a	w		ゎ			ゑ					ろれ	ろろ		ろわ		ろゑ		{![9!.[9		bh¤!¹!Ł[!.[9	bh¤!¹!Ł[!.[9
Y9Ð!¤[!/Y¤ Łh /t!	[illegible]	!⊡[Y	D/	t[w		a	w		ゎ	わ	ゐ	ゑ	を	ん			ろれ	ろろ	ろゎ		ろゐ	ろゑ		{![9!.[9		bh¤!¹!Ł[!.[9	bh¤!¹!Ł[!.[9
Y9Ð!¤[!/Y¤ Łh /t!	[illegible]	!⊡[Y	D/	t[w		a	w		ゎ	わ	ゐ	ゑ	を	ん			ろれ	ろろ		ろわ	ろゐ	ろゑ		{![9!.[9		bh¤!¹!Ł[!.[9	bh¤!¹!Ł[!.[9
Y9Ð!¤[!/Y¤ Łt!	[illegible]	!⊡[Y	D/	t[w	/t!	a	w		ゎ	わ		ゑ		ん			ろれ	ろろ	ろゎ	ろわ	ろゐ	ろゑ		{![9!.[9		bh¤!¹!Ł[!.[9	bh¤!¹!Ł[!.[9
Y9Ð!¤[!/Y¤ Łh /t!	[illegible]	!⊡[Y	D/	t[w		a	w		ゎ	わ	ゐ		を				ろれ	ろろ	ろゎ	ろわ				{![9!.[9		bh¤!¹!Ł[!.[9	bh¤!¹!Ł[!.[9
Y9Ð!¤[!/Y¤ Łh /t!	[illegible]	!⊡[Y	D/	t[w		a	w		ゎ	わ	ゐ			ん			ろれ	ろろ	ろゎ	ろわ	ろゐ	ろゑ		{![9!.[9		bh¤!¹!Ł[!.[9	bh¤!¹!Ł[!.[9
Y9Ð!¤[!/Y¤ Łh /t!	[illegible]	!⊡[Y	D/	t[w		a	w			わ			を					ろろ			ろゐ	ろゑ		{![9!.[9		bh¤!¹!Ł[!.[9	bh¤!¹!Ł[!.[9
Y9Ð!¤[!/Y¤ Łh /t!	[illegible]	!⊡[Y	D/	t[w		a	w				ゐ	ゑ							ろゎ		ろゐ	ろゑ		{![9!.[9		bh¤!¹!Ł[!.[9	bh¤!¹!Ł[!.[9
Y9Ð!¤[!/Y¤ Łh /t!	[illegible]	!⊡[Y	D/	t[w		a	w			わ			を	ん				ろろ			ろゐ	ろゑ		{![9!.[9		bh¤!¹!Ł[!.[9	bh¤!¹!Ł[!.[9
Y9Ð!¤[!/Y¤ Łh /t!	[illegible]	!⊡[Y	D/	t[w		a	w						を	ん						ろわ	ろゐ	ろゑ		{![9!.[9		bh¤!¹!Ł[!.[9	bh¤!¹!Ł[!.[9
Y9Ð!¤[!/Y¤ Łh /t!	[illegible]	!⊡[Y	D/	t[w		a	w														ろゐ	ろゑ		{![9!.[9		bh¤!¹!Ł[!.[9	bh¤!¹!Ł[!.[9
Y9Ð!¤[!/Y¤ Łh /t!	[illegible]	!⊡[Y	D/	t[w		a	w		ゎ											ろわ	ろゐ	ろゑ		{![9!.[9		bh¤!¹!Ł[!.[9	bh¤!¹!Ł[!.[9
Y9Ð!¤[!/Y¤ Łh /t!	[illegible]	!⊡[Y	D/	t[w		a	w			わ	ゐ	ゑ		ん			ろれ	ろろ	ろゎ		ろゐ	ろゑ		{![9!.[9		bh¤!¹!Ł[!.[9	bh¤!¹!Ł[!.[9
Y9Ð!¤[!/Y¤ Łh /t!	[illegible]	!⊡[Y	D/	t[w		a	w			わ	ゐ		を				ろれ	ろろ	ろゎ	ろわ	ろゐ	ろゑ		{![9!.[9		bh¤!¹!Ł[!.[9	bh¤!¹!Ł[!.[9
Y9Ð!¤[!/Y¤ Łh /t!	[illegible]	!⊡[Y	D/	t[w		a	w						を	ん				ろろ		ろわ				{![9!.[9		bh¤!¹!Ł[!.[9	bh¤!¹!Ł[!.[9
Y9Ð!¤[!/Y¤ Łh /t!	[illegible]	!⊡[Y	D/	t[w		a	w		ゎ	わ			を					ろろ		ろわ				{![9!.[9		bh¤!¹!Ł[!.[9	bh¤!¹!Ł[!.[9
Y9Ð!¤[!/Y¤ Łh /t!	[illegible]	!⊡[Y	D/	t[w		a	w						を					ろろ		ろわ				{![9!.[9		bh¤!¹!Ł[!.[9	bh¤!¹!Ł[!.[9
Y9Ð!¤[!/Y¤ Łh /t!	[illegible]	!⊡[Y	D/	t[w		a	w			わ	ゐ						ろれ	ろろ	ろゎ					{![9!.[9		bh¤!¹!Ł[!.[9	bh¤!¹!Ł[!.[9
Y9Ð!¤[!/Y¤ Łh /t!	[illegible]	!⊡[Y	D/	t[w		a	w		ゎ	わ	ゐ		を				ろれ	ろろ	ろゎ	ろわ	ろゐ			{![9!.[9		bh¤!¹!Ł[!.[9	bh¤!¹!Ł[!.[9
Y9Ð!¤[!/Y¤ Łh /t!	[illegible]	!⊡[Y	D/	t[w		a	w		ゎ				を					ろろ						{![9!.[9		bh¤!¹!Ł[!.[9	bh¤!¹!Ł[!.[9
Y9Ð!¤[!/Y¤ Łt!	[illegible]	!⊡[Y	D/	t[w	/t!	a	w		ゎ	わ	ゐ		を				ろれ	ろろ	ろゎ	ろわ	ろゐ			{![9!.[9		bh¤!¹!Ł[!.[9	bh¤!¹!Ł[!.[9
Y9Ð!¤[!/Y¤ Łh /t!	[illegible]	!⊡[Y	D/	t[w		a	w		ゎ	わ	ゐ		を				ろれ	ろろ	ろゎ	ろわ	ろゐ	ろゑ		{![9!.[9		bh¤!¹!Ł[!.[9	bh¤!¹!Ł[!.[9
Y9Ð!¤[!/Y¤ Łh /t!	[illegible]	!⊡[Y	D/	t[w		a	w			わ	ゐ	ゑ	を	ん			ろれ	ろろ	ろゎ	ろわ	ろゐ	ろゑ		{![9!.[9		bh¤!¹!Ł[!.[9	bh¤!¹!Ł[!.[9
Y9Ð!¤[!/Y¤ Łh /t!	[illegible]	!⊡[Y	D/	t[w		a	w													ろわ				{![9!.[9		bh¤!¹!Ł[!.[9	bh¤!¹!Ł[!.[9
Y9Ð!¤[!/Y¤ Łh /t!	[illegible]	!⊡[Y	D/	t[w		a	w		ゎ	わ							ろれ	ろろ		ろわ				{![9!.[9		bh¤!¹!Ł[!.[9	bh¤!¹!Ł[!.[9
Y9Ð!¤[!/Y¤ Łh /t!	[illegible]	!⊡[Y	D/	t[w		a	w				ゐ	ゑ	を	ん					ろゎ	ろわ	ろゐ	ろゑ		{![9!.[9		bh¤!¹!Ł[!.[9	bh¤!¹!Ł[!.[9
Y9Ð!¤[!/Y¤ Łh /t!	[illegible]	!⊡[Y	D/	t[w		a	w		ゎ	わ				ん			ろれ	ろろ		ろわ		ろゑ		{![9!.[9		bh¤!¹!Ł[!.[9	bh¤!¹!Ł[!.[9
Y9Ð!¤[!/Y¤ Łh /t!	[illegible]	!⊡[Y	D/	t[w		a	w							ん						ろわ		ろゑ		{![9!.[9		bh¤!¹!Ł[!.[9	bh¤!¹!Ł[!.[9
Y9Ð!¤[!/Y¤ Łh /t!	[illegible]	!⊡[Y	D/	t[w		a	w				ゐ													{![9!.[9		bh¤!¹!Ł[!.[9	bh¤!¹!Ł[!.[9
Y9Ð/¤5!wY DwŁÐ¤ Łh /t!	[illegible]	/⊡5D	D/	t[w		a	w																	{![9!.[9		bh¤!¹!Ł[!.[9	bh¤!¹!Ł[!.[9
Y9Ð!¤[!/Y¤ Łh /t!	[illegible]	!⊡[Y	D/	t[w		a	w		ゎ		ゐ	ゑ								ろわ	ろゐ	ろゑ		{![9!.[9		bh¤!¹!Ł[!.[9	bh¤!¹!Ł[!.[9
Y9Ð!¤[!/Y¤ Łh /t!	[illegible]	!⊡[Y	D/	t[w		a	w		ゎ				を	ん				ろろ	ろゎ	ろわ	ろゐ			{![9!.[9		bh¤!¹!Ł[!.[9	bh¤!¹!Ł[!.[9
Y9Ð!¤[!/Y¤ Łh /t!	[illegible]	!⊡[Y	D/	t[w		a	w		ゎ		ゐ	ゑ					ろれ	ろろ	ろゎ	ろわ	ろゐ	ろゑ		{![9!.[9		bh¤!¹!Ł[!.[9	bh¤!¹!Ł[!.[9

molex

a ÆZ3ろれろ3を° ! ÐIÐ. wl5 w9/9t¤! /[9{9! [95 ! {{9a . [Ða ! ¤{9! [° l¤I h- ¤/[lt{[h¤☞わ5ÏI I /! ¹ l¤l9{ ht 9b、
. ha ! b5 t lb h- ¤{I 99¤

! {{9a . [Ð59{/wlt¤lhb	! {{9a . [Ðt! w¤ b- a . 9w	/ha thb9b¤ — I h-{lbD Y9Ð♨h[hw	/ha thb9b¤ — Dwhaa 9¤ /!t	/ha thb9b¤ — t[w	/ha thb9b¤ — /t!	/ha thb9b¤ — a ! ¤{9! [	/ha thb9b¤ — wlbD {9! [	ろ	ゎ	わ	ゐ	ゑ	を	ん	ゔ	゛	ろれ	ろろ	ろゎ	ろわ	ろゐ	ろゑ	ろを	{¤! ¤- {	/haa 9b¤{	.!/Y{I 9[[° l¤I wL{	.!/Y{I 9[[° l¤I h-¤ wL{
Y9Ð! ☞[! /Y☞ ♨ /t!	[illegible]	! ⊡[Y	D/	t[w		a	w			ｵ		ゑ					ろｵ	ろｴ	ろｵ.					{![9!.[9		bh¤!¹!l[!.[9	bh¤!¹!l[!.[9
Y9Ð! ☞[! /Y☞ ♨ /t!	[illegible]	! ⊡[Y	D/	t[w		a	w		ｵ.			ゑ					ろｵ							{![9!.[9		bh¤!¹!l[!.[9	bh¤!¹!l[!.[9
Y9Ð! ☞[! /Y☞ ♨ /t!	[illegible]	! ⊡[Y	D/	t[w		a	w		ｵ.	ｵ	ð						ろｵ	ろｴ	ろｵ.	ろｵ.		ろゑ		{![9!.[9		bh¤!¹!l[!.[9	bh¤!¹!l[!.[9
Y9Ð! ☞[! /Y☞ ♨ /t!	[illegible]	! ⊡[Y	D/	t[w		a	w										ろｵ	ろｴ		ろｵ.	ろð	ろゑ		{![9!.[9		bh¤!¹!l[!.[9	bh¤!¹!l[!.[9
Y9Ð! ☞[! /Y☞ ♨ /t!	[illegible]	! ⊡[Y	D/	t[w		a	w										ろｵ	ろｴ						{![9!.[9		bh¤!¹!l[!.[9	bh¤!¹!l[!.[9
Y9Ð! ☞[! /Y☞ ♨t!	[illegible]	! ⊡[Y	D/	t[w	/t!	a	w		ｵ.	ｵ	ð						ろｵ	ろｴ	ろｵ.					{![9!.[9		bh¤!¹!l[!.[9	bh¤!¹!l[!.[9
Y9Ð. ☞[lDI ¤ Dw Ð☞ ♨ /t!	[illegible]	. ⊡D	D/	t[w		a	w		ｵ.	ｵ	ð	ゑ	ｾ	ﾊ			ろｵ	ろｴ	ろｵ.	ろｵ.	ろð	ろゑ		{![9!.[9		bh¤!¹!l[!.[9	bh¤!¹!l[!.[9
Y9Ð! ☞[! /Y☞ ♨t!	[illegible]	! ⊡[Y	D/	t[w	/t!	a	w			ｵ			ｾ				ろｵ	ろｴ	ろｵ.		ろð	ろゑ		{![9!.[9		bh¤!¹!l[!.[9	bh¤!¹!l[!.[9
Y9Ð! ☞[! /Y☞ ♨t!	[illegible]	! ⊡[Y	D/	t[w	/t!	a	w		ｵ.	ｵ	ð	ゑ		ﾊ										{![9!.[9		bh¤!¹!l[!.[9	bh¤!¹!l[!.[9
Y9Ð! ☞[! /Y☞ ♨t!	[illegible]	! ⊡[Y	D/	t[w	/t!	a	w						ｾ				ろｵ	ろｴ	ろｵ.		ろð	ろゑ		{![9!.[9		bh¤!¹!l[!.[9	bh¤!¹!l[!.[9
Y9Ð! ☞[! /Y☞ ♨ /t!	[illegible]	! ⊡[Y	D/	t[w		a	w			ｵ		ゑ					ろｵ	ろｴ						{![9!.[9		bh¤!¹!l[!.[9	bh¤!¹!l[!.[9
Y9Ð! ☞[! /Y☞ ♨t!	[illegible]	! ⊡[Y	D/	t[w	/t!	a	w																	{![9!.[9		bh¤!¹!l[!.[9	bh¤!¹!l[!.[9
Y9Ð! ☞[! /Y☞ ♨ /t!	[illegible]	! ⊡[Y	D/	t[w		a	w			ｵ			ｾ				ろｵ	ろｴ	ろｵ.		ろð	ろゑ		{![9!.[9		bh¤!¹!l[!.[9	bh¤!¹!l[!.[9
Y9Ð! ☞[! /Y☞ ♨ /t!	[illegible]	! ⊡[Y	D/	t[w		a	w		ｵ.	ｵ	ð	ゑ		ﾊ										{![9!.[9		bh¤!¹!l[!.[9	bh¤!¹!l[!.[9
Y9Ð! ☞[! /Y☞ ♨ /t!	[illegible]	! ⊡[Y	D/	t[w		a	w						ｾ				ろｵ	ろｴ	ろｵ.		ろð	ろゑ		{![9!.[9		bh¤!¹!l[!.[9	bh¤!¹!l[!.[9
Y9Ð! ☞[! /Y☞ ♨t!	[illegible]	! ⊡[Y	D/	t[w	/t!	a	w		ｵ.	ｵ	ð	ゑ	ｾ				ろｵ	ろｴ	ろｵ.		ろð	ろゑ		{![9!.[9		bh¤!¹!l[!.[9	bh¤!¹!l[!.[9
Y9Ð! ☞[! /Y☞ ♨ /t!	[illegible]	! ⊡[Y	D/	t[w		a	w		ｵ.		ð						ろｵ							{![9!.[9		bh¤!¹!l[!.[9	bh¤!¹!l[!.[9
Y9Ð! ☞[! /Y☞ ♨ /t!	[illegible]	! ⊡[Y	D/	t[w		a	w		ｵ.		ð						ろｵ	ろｴ						{![9!.[9		bh¤!¹!l[!.[9	bh¤!¹!l[!.[9
Y9Ð5☞{¤hb9 Dw Ð☞ ♨ /t!	[illegible]	5 ⊡D	D/	t[w		a	w																	{![9!.[9		bh¤!¹!l[!.[9	bh¤!¹!l[!.[9
Y9Ð! ☞[! /Y☞ ♨ /t!	[illegible]	! ⊡[Y	D/	t[w		a	w		ｵ.	ｵ	ð	ゑ												{![9!.[9		bh¤!¹!l[!.[9	bh¤!¹!l[!.[9
Y9Ð! ☞[! /Y☞ ♨ /t!	[illegible]	! ⊡[Y	D/	t[w		a	w		ｵ.					ﾊ				ろｴ			ろð	ろゑ		{![9!.[9		bh¤!¹!l[!.[9	bh¤!¹!l[!.[9
Y9Ð/☞5! wY Dw Ð☞ ♨t!	[illegible]	/ ⊡D	D/	t[w	/t!	a	w																	{![9!.[9		bh¤!¹!l[!.[9	bh¤!¹!l[!.[9
Y9Ð! ☞Ð9[[h° ☞ ♨t!	[illegible]	! Ð°	D/	t[w	/t!	a	w																	{![9!.[9		bh¤!¹!l[!.[9	bh¤!¹!l[!.[9
Y9Ð! ☞[! /Y☞ ♨t!	[illegible]	! ⊡[Y	D/	t[w	/t!	a	w															ろゑ		{![9!.[9		bh¤!¹!l[!.[9	bh¤!¹!l[!.[9
Y9Ð. ☞[lDI ¤ Dw Ð☞ ♨t!	[illegible]	. ⊡D	D/	t[w	/t!	a	w		ｵ.	ｵ	ð	ゑ	ｾ	ﾊ							ろð			{![9!.[9		bh¤!¹!l[!.[9	bh¤!¹!l[!.[9
Y9Ð. ☞[lDI ¤ Dw Ð☞ ♨ /t!	[illegible]	. ⊡D	D/	t[w		a	w		ｵ.	ｵ	ð	ゑ	ｾ	ﾊ							ろð			{![9!.[9		bh¤!¹!l[!.[9	bh¤!¹!l[!.[9
Y9Ð! ☞[! /Y☞ ♨t!	[illegible]	! ⊡[Y	D/	t[w	/t!	a	w				ð	ゑ	ｾ	ﾊ					ろｵ.	ろｵ.	ろð	ろゑ		{![9!.[9		bh¤!¹!l[!.[9	bh¤!¹!l[!.[9
Y9Ð! ☞[! /Y☞ ♨t!	[illegible]	! ⊡[Y	D/	t[w	/t!	a	w							ﾊ						ろｵ.		ろゑ		{![9!.[9		bh¤!¹!l[!.[9	bh¤!¹!l[!.[9
Y9Ð! ☞[! /Y☞ ♨t!	[illegible]	! ⊡[Y	D/	t[w	/t!	a	w		ｵ.	ｵ							ろｵ	ろｴ		ろｵ.				{![9!.[9		bh¤!¹!l[!.[9	bh¤!¹!l[!.[9
Y9Ð! ☞[! /Y☞ ♨t!	[illegible]	! ⊡[Y	D/	t[w	/t!	a	w													ろｵ.				{![9!.[9		bh¤!¹!l[!.[9	bh¤!¹!l[!.[9
Y9Ð. ☞[lDI ¤ Dw Ð☞ ♨t!	[illegible]	. ⊡D	D/	t[w	/t!	a	w		ｵ.	ｵ							ろｵ							{![9!.[9		bh¤!¹!l[!.[9	bh¤!¹!l[!.[9
Y9Ð/☞5! wY Dw Ð☞ ♨t!	[illegible]	/ ⊡D	D/	t[w	/t!	a	w			ｵ	ð		ｾ	ﾊ			ろｵ	ろｴ		ろｵ.		ろゑ		{![9!.[9		bh¤!¹!l[!.[9	bh¤!¹!l[!.[9
Y9Ð/☞5! wY Dw Ð☞ ♨ /t!	[illegible]	/ ⊡D	D/	t[w		a	w			ｵ	ð		ｾ	ﾊ			ろｵ	ろｴ		ろｵ.		ろゑ		{![9!.[9		bh¤!¹!l[!.[9	bh¤!¹!l[!.[9
Y9Ð. ☞[lDI ¤ Dw Ð☞ ♨ /t!	[illegible]	. ⊡D	D/	t[w		a	w			ｵ							ろｵ							{![9!.[9		bh¤!¹!l[!.[9	bh¤!¹!l[!.[9
Y9Ð! ☞[! /Y☞ ♨t!	[illegible]	! ⊡[Y	D/	t[w	/t!	a	w						ｾ	ﾊ					ろｵ.					{![9!.[9		bh¤!¹!l[!.[9	bh¤!¹!l[!.[9
Y9Ð! ☞[! /Y☞ ♨t!	[illegible]	! ⊡[Y	D/	t[w	/t!	a	w		ｵ.		ð	ゑ		ﾊ					ろｵ.	ろｵ.				{![9!.[9		bh¤!¹!l[!.[9	bh¤!¹!l[!.[9
Y9Ð. ☞[lDI ¤ Dw Ð☞ ♨t!	[illegible]	. ⊡D	D/	t[w	/t!	a	w													ろｵ.				{![9!.[9		bh¤!¹!l[!.[9	bh¤!¹!l[!.[9
Y9Ð! ☞[! /Y☞ ♨t!	[illegible]	! ⊡[Y	D/	t[w	/t!	a	w							ﾊ					ろｵ.	ろｵ.	ろð	ろゑ		{![9!.[9		bh¤!¹!l[!.[9	bh¤!¹!l[!.[9
Y9Ð. ☞[lDI ¤ Dw Ð☞ ♨t!	[illegible]	. ⊡D	D/	t[w	/t!	a	w			ｵ							ろｵ	ろｴ	ろｵ.	ろｵ.	ろð			{![9!.[9		bh¤!¹!l[!.[9	bh¤!¹!l[!.[9
Y9Ð! ☞[! /Y☞ ♨ /t!	[illegible]	! ⊡[Y	D/	t[w		a	w			ｵ		ゑ							ろｵ.					{![9!.[9		bh¤!¹!l[!.[9	bh¤!¹!l[!.[9
Y9Ð. ☞[lDI ¤ Dw Ð☞ ♨t!	[illegible]	. ⊡D	D/	t[w	/t!	a	w			ｵ							ろｵ							{![9!.[9		bh¤!¹!l[!.[9	bh¤!¹!l[!.[9
Y9Ð. ☞[lDI ¤ Dw Ð☞ ♨t!	[illegible]	. ⊡D	D/	t[w	/t!	a	w		ｵ.	ｵ								ろｴ	ろｵ.	ろｵ.				{![9!.[9		bh¤!¹!l[!.[9	bh¤!¹!l[!.[9
Y9Ð. ☞[lDI ¤ Dw Ð☞ ♨t!	[illegible]	. ⊡D	D/	t[w	/t!	a	w		ｵ.	ｵ			ｾ	ﾊ			ろｵ	ろｴ	ろｵ.	ろｵ.				{![9!.[9		bh¤!¹!l[!.[9	bh¤!¹!l[!.[9
Y9Ð. ☞[lDI ¤ Dw Ð☞ ♨t!	[illegible]	. ⊡D	D/	t[w	/t!	a	w		ｵ.	ｵ														{![9!.[9		bh¤!¹!l[!.[9	bh¤!¹!l[!.[9
Y9Ð! ☞[! /Y☞ ♨t!	[illegible]	! ⊡[Y	D/	t[w	/t!	a	w		ｵ.				ｾ				ろｵ							{![9!.[9		bh¤!¹!l[!.[9	bh¤!¹!l[!.[9
Y9Ð5☞{¤hb9 Dw Ð☞ ♨t!	[illegible]	5 ⊡D	D/	t[w	/t!	a	w																	{![9!.[9		bh¤!¹!l[!.[9	bh¤!¹!l[!.[9
Y9Ð! ☞[! /Y☞ ♨ /t!	[illegible]	! ⊡[Y	D/	t[w		a	w						ｾ					ろｴ				ろゑ		{![9!.[9		bh¤!¹!l[!.[9	bh¤!¹!l[!.[9
Y9Ð! ☞[! /Y☞ ♨ /t!	[illegible]	! ⊡[Y	D/	t[w		a	w		ｵ.	ｵ	ð		ｾ				ろｵ	ろｴ	ろｵ.		ろð	ろゑ		{![9!.[9		bh¤!¹!l[!.[9	bh¤!¹!l[!.[9
Y9Ð! ☞[! /Y☞ ♨ /t!	[illegible]	! ⊡[Y	D/	t[w		a	w				ð		ｾ							ろｵ.				{![9!.[9		bh¤!¹!l[!.[9	bh¤!¹!l[!.[9
Y9Ð! ☞[! /Y☞ ♨t!	[illegible]	! ⊡[Y	D/	t[w	/t!	a	w		ｵ.	ｵ		ゑ	ｾ	ﾊ			ろｵ			ろｵ.	ろð	ろゑ		{![9!.[9		bh¤!¹!l[!.[9	bh¤!¹!l[!.[9
Y9Ð! ☞[! /Y☞ ♨t!	[illegible]	! ⊡[Y	D/	t[w	/t!	a	w					ゑ	ｾ	ﾊ			ろｵ	ろｴ	ろｵ.	ろｵ.				{![9!.[9		bh¤!¹!l[!.[9	bh¤!¹!l[!.[9
Y9Ð! ☞[! /Y☞ ♨ /t!	[illegible]	! ⊡[Y	D/	t[w		a	w											ろｴ						{![9!.[9		bh¤!¹!l[!.[9	bh¤!¹!l[!.[9
Y9Ð! ☞Ð9[[h° ☞ ♨t!	[illegible]	! Ð°	D/	t[w	/t!	a	w		ｵ.												ろð	ろゑ		{![9!.[9		bh¤!¹!l[!.[9	bh¤!¹!l[!.[9
Y9Ð! ☞Ð9[[h° ☞ ♨t!	[illegible]	! Ð°	D/	t[w	/t!	a	w		ｵ.	ｵ												ろゑ		{![9!.[9		bh¤!¹!l[!.[9	bh¤!¹!l[!.[9
Y9Ð. ☞[lDI ¤ Dw Ð☞ ♨t!	[illegible]	. ⊡D	D/	t[w	/t!	a	w		ｵ.	ｵ											ろð	ろゑ		{![9!.[9		bh¤!¹!l[!.[9	bh¤!¹!l[!.[9
Y9Ð. ☞[lDI ¤ Dw Ð☞ ♨t!	[illegible]	. ⊡D	D/	t[w	/t!	a	w		ｵ.	ｵ								ろｴ	ろｵ.	ろｵ.	ろð	ろゑ		{![9!.[9		bh¤!¹!l[!.[9	bh¤!¹!l[!.[9
Y9Ð. ☞[lDI ¤ Dw Ð☞ ♨t!	[illegible]	. ⊡D	D/	t[w	/t!	a	w											ろｴ		ろｵ.				{![9!.[9		bh¤!¹!l[!.[9	bh¤!¹!l[!.[9
Y9Ð! ☞[! /Y☞ ♨ /t!	[illegible]	! ⊡[Y	D/	t[w		a	w			ｵ							ろｵ							{![9!.[9		bh¤!¹!l[!.[9	bh¤!¹!l[!.[9
Y9Ð! ☞[! /Y☞ ♨ /t!	[illegible]	! ⊡[Y	D/	t[w		a	w		ｵ.			ゑ	ｾ				ろｵ	ろｴ			ろð	ろゑ		{![9!.[9		bh¤!¹!l[!.[9	bh¤!¹!l[!.[9
Y9Ð! ☞[! /Y☞ ♨ /t!	[illegible]	! ⊡[Y	D/	t[w		a	w										ろｵ				ろð	ろゑ		{![9!.[9		bh¤!¹!l[!.[9	bh¤!¹!l[!.[9
Y9Ð! ☞[! /Y☞ ♨ /t!	[illegible]	! ⊡[Y	D/	t[w		a	w		ｵ.			ゑ	ｾ				ろｵ	ろｴ						{![9!.[9		bh¤!¹!l[!.[9	bh¤!¹!l[!.[9
Y9Ð! ☞[! /Y☞ ♨ /t!	[illegible]	! ⊡[Y	D/	t[w		a	w										ろｵ							{![9!.[9		bh¤!¹!l[!.[9	bh¤!¹!l[!.[9
Y9Ð! ☞[! /Y☞ ♨ /t!	[illegible]	! ⊡[Y	D/	t[w		a	w										ろｵ	ろｴ			ろð	ろゑ		{![9!.[9		bh¤!¹!l[!.[9	bh¤!¹!l[!.[9
Y9Ð! ☞[! /Y☞ ♨ /t!	[illegible]	! ⊡[Y	D/	t[w		a	w					ゑ	ｾ	ﾊ			ろｵ	ろｴ	ろｵ.	ろｵ.				{![9!.[9		bh¤!¹!l[!.[9	bh¤!¹!l[!.[9
Y9Ð! ☞[! /Y☞ ♨ /t!	[illegible]	! ⊡[Y	D/	t[w		a	w		ｵ.	ｵ		ゑ	ｾ	ﾊ			ろｵ			ろｵ.	ろð	ろゑ		{![9!.[9		bh¤!¹!l[!.[9	bh¤!¹!l[!.[9
Y9Ð! ☞[! /Y☞ ♨t!	[illegible]	! ⊡[Y	D/	t[w	/t!	a	w			ｵ							ろｵ	ろｴ	ろｵ.	ろｵ.	ろð			{![9!.[9		bh¤!¹!l[!.[9	bh¤!¹!l[!.[9
Y9Ð/☞5! wY Dw Ð☞ ♨t!	[illegible]	/ ⊡D	D/	t[w	/t!	a	w			ｵ							ろｵ	ろｴ	ろｵ.	ろｵ.	ろð			{![9!.[9		bh¤!¹!l[!.[9	bh¤!¹!l[!.[9
Y9Ð! ☞[! /Y☞ ♨ /t!	[illegible]	! ⊡[Y	D/	t[w		a	w			ｵ	ð	ゑ					ろｵ	ろｴ						{![9!.[9		bh¤!¹!l[!.[9	bh¤!¹!l[!.[9
Y9Ð. ☞[lDI ¤ Dw Ð☞ ♨ /t!	[illegible]	. ⊡D	D/	t[w		a	w		ｵ.	ｵ			ｾ	ﾊ										{![9!.[9		bh¤!¹!l[!.[9	bh¤!¹!l[!.[9
Y9Ð. ☞[lDI ¤ Dw Ð☞ ♨ /t!	[illegible]	. ⊡D	D/	t[w		a	w				ð			ﾊ										{![9!.[9		bh¤!¹!l[!.[9	bh¤!¹!l[!.[9
Y9Ð! ☞[! /Y☞ ♨ /t!	[illegible]	! ⊡[Y	D/	t[w		a	w					ゑ												{![9!.[9		bh¤!¹!l[!.[9	bh¤!¹!l[!.[9
Y9Ð! ☞[! /Y☞ ♨t!	[illegible]	! ⊡[Y	D/	t[w	/t!	a	w					ゑ												{![9!.[9		bh¤!¹!l[!.[9	bh¤!¹!l[!.[9
Y9Ð! ☞[! /Y☞ ♨t!	[illegible]	! ⊡[Y	D/	t[w	/t!	a	w		ｵ.			ゑ					ろｵ				ろð			{![9!.[9		bh¤!¹!l[!.[9	bh¤!¹!l[!.[9
Y9Ð! ☞[! /Y☞ ♨ /t!	[illegible]	! ⊡[Y	D/	t[w		a	w		ｵ.			ゑ	ｾ				ろｵ	ろｴ	ろｵ.	ろｵ.	ろð	ろゑ		{![9!.[9		bh¤!¹!l[!.[9	bh¤!¹!l[!.[9
Y9Ð! ☞[! /Y☞ ♨t!	[illegible]	! ⊡[Y	D/	t[w	/t!	a	w		ｵ.	ｵ	ð	ゑ	ｾ	ﾊ								ろゑ		{![9!.[9		bh¤!¹!l[!.[9	bh¤!¹!l[!.[9
Y9Ð. ☞[lDI ¤ Dw Ð☞ ♨t!	[illegible]	. ⊡D	D/	t[w	/t!	a	w		ｵ.	ｵ	ð	ゑ	ｾ	ﾊ								ろゑ		{![9!.[9		bh¤!¹!l[!.[9	bh¤!¹!l[!.[9
Y9Ð! ☞[! /Y☞ ♨t!	[illegible]	! ⊡[Y	D/	t[w	/t!	a	w					ゑ	ｾ	ﾊ			ろｵ	ろｴ						{![9!.[9		bh¤!¹!l[!.[9	bh¤!¹!l[!.[9
Y9Ð! ☞[! /Y☞ ♨t!	[illegible]	! ⊡[Y	D/	t[w	/t!	a	w							ﾊ			ろｵ			ろｵ.				{![9!.[9		bh¤!¹!l[!.[9	bh¤!¹!l[!.[9
Y9Ð/☞5! wY Dw Ð☞ ♨t!	[illegible]	/ ⊡D	D/	t[w	/t!	a	w			ｵ	ð		ｾ	ﾊ			ろｵ	ろｴ		ろｵ.	ろð	ろゑ		{![9!.[9		bh¤!¹!l[!.[9	bh¤!¹!l[!.[9
Y9Ð! ☞[! /Y☞ ♨ /t!	[illegible]	! ⊡[Y	D/	t[w		a	w				ð	ゑ	ｾ	ﾊ			ろｵ		ろｵ.	ろｵ.	ろð	ろゑ		{![9!.[9		bh¤!¹!l[!.[9	bh¤!¹!l[!.[9
Y9Ð! ☞[! /Y☞ ♨ /t!	[illegible]	! ⊡[Y	D/	t[w		a	w							ﾊ			ろｵ					ろゑ		{![9!.[9		bh¤!¹!l[!.[9	bh¤!¹!l[!.[9
Y9Ð! ☞[! /Y☞ ♨ /t!	[illegible]	! ⊡[Y	D/	t[w		a	w							ﾊ				ろｴ				ろゑ		{![9!.[9		bh¤!¹!l[!.[9	bh¤!¹!l[!.[9
Y9Ð! ☞[! /Y☞ ♨ /t!	[illegible]	! ⊡[Y	D/	t[w		a	w		ｵ.	ｵ				ﾊ			ろｵ	ろｴ				ろゑ		{![9!.[9		bh¤!¹!l[!.[9	bh¤!¹!l[!.[9
Y9Ð! ☞[! /Y☞ ♨ /t!	[illegible]	! ⊡[Y	D/	t[w		a	w		ｵ.	ｵ							ろｵ	ろｴ						{![9!.[9		bh¤!¹!l[!.[9	bh¤!¹!l[!.[9
Y9Ð! ☞[! /Y☞ ♨t!	[illegible]	! ⊡[Y	D/	t[w	/t!	a	w					ゑ					ろｵ	ろｴ	ろｵ.	ろｵ.	ろð			{![9!.[9		bh¤!¹!l[!.[9	bh¤!¹!l[!.[9
Y9Ð! ☞[! /Y☞ ♨t!	[illegible]	! ⊡[Y	D/	t[w	/t!	a	w		ｵ.	ｵ	ð			ﾊ			ろｵ	ろｴ	ろｵ.	ろｵ.	ろð	ろゑ		{![9!.[9		bh¤!¹!l[!.[9	bh¤!¹!l[!.[9
Y9Ð! ☞[! /Y☞ ♨t!	[illegible]	! ⊡[Y	D/	t[w	/t!	a	w		ｵ.					ﾊ			ろｵ				ろð			{![9!.[9		bh¤!¹!l[!.[9	bh¤!¹!l[!.[9
Y9Ð! ☞[! /Y☞ ♨t!	[illegible]	! ⊡[Y	D/	t[w	/t!	a	w		ｵ.				ｾ	ﾊ			ろｵ	ろｴ	ろｵ.	ろｵ.	ろð	ろゑ		{![9!.[9		bh¤!¹!l[!.[9	bh¤!¹!l[!.[9
Y9Ð! ☞[! /Y☞ ♨ /t!	[illegible]	! ⊡[Y	D/	t[w		a	w		ｵ.	ｵ	ð	ゑ									ろð			{![9!.[9		bh¤!¹!l[!.[9	bh¤!¹!l[!.[9
Y9Ð. ☞[lDI ¤ Dw Ð☞ ♨ /t!	[illegible]	. ⊡D	D/	t[w		a	w				ð	ゑ					ろｵ	ろｴ	ろｵ.	ろｵ.	ろð	ろゑ		{![9!.[9		bh¤!¹!l[!.[9	bh¤!¹!l[!.[9

a Æ3ゑれ3を° ! ÐI Ð. wL5 w9/9t¤! /[9{9![95 !{{9a.[Ða!¤{9![° L¤I h-¤/[Lt{[h¤☞わ5Ì I /!¹L¤L9{ ht9b、
. ha ! b5 t Lb h-¤{I 99¤

!{{9a.[Ð59{/wLt¤Lhb	!{{9a.[Ðt!w¤ b-a.9w	/ha thb9b¤						.[h/Y95 ¤9wa Lb![{																{¤!¤-{	/ha a 9b¤{	ht¤Lhb![!¤¤!¤/I a 9b¤{{h[5{9t9w!¤9[Ð	
		¤I 9tw9{9b/9hC!b!..w9¹L!¤Lhb Lb5L/!¤9{ ¤I 9tw9{9b/9hC¤I!¤ /ha thb9b¤♔						/!¹L¤Ð° L¤I ! b-a.9wLb5L/!¤9{.[h/Y95 ¤9wa Lb![th{L¤Lhb /!¹L¤Ð° L¤I h-¤! b-a.9wLb5L/!¤9{ht9b ¤9wa Lb![th{L¤Lhb																			
		I h-{LbD Y9ÐW h[hw	Dwha a 9¤ /!t	t[w	/t!	a!¤{9![	wLbD {9![	ろ	ゎ	わ	ゐ	ゑ	を	ん	ゔ	゛	ろれ	ろろ	ろゎ	ろわ	ろゐ	ろゑ	ろを			.!/Y{I 9[[° L¤I wL{	.!/Y{I 9[[° L¤I h-¤ wL{
Y9Ð. ☞[LDI ¤ Dw Ð☞ ⛲ /t!	わゐ うゑゐわ[illegible]	. ⅡD	D/	t[w		a	w		ォ			ゑ	を	ん				ろヹ						{![9!.[9		bh¤!¹!L[!.[9	bh¤!¹!L[!.[9
Y9Ð! ☞[! /Y☞ ⛲ /t!	わゐ うゑゐわ[illegible]	! ⊡[Y	D/	t[w		a	w										ろォ		ろォ	ろォ	ろゐ	ろゑ		{![9!.[9		bh¤!¹!L[!.[9	bh¤!¹!L[!.[9
Y9Ð! ☞[! /Y☞ ⛲ /t!	わゐ うゑゐわ[illegible]	! ⊡[Y	D/	t[w		a	w											ろヹ			ろゐ	ろゑ		{![9!.[9		bh¤!¹!L[!.[9	bh¤!¹!L[!.[9
Y9Ð! ☞[! /Y☞ ⛲t!	わゐ うゑゐわ[illegible]	! ⊡[Y	D/	t[w	/t!	a	w														ろゐ	ろゑ		{![9!.[9		bh¤!¹!L[!.[9	bh¤!¹!L[!.[9
Y9Ð. ☞[LDI ¤ Dw Ð☞ ⛲ /t!	わゐ うゑゐわ[illegible]	. ⅡD	D/	t[w		a	w		ォ			ゑ	を	ん										{![9!.[9		bh¤!¹!L[!.[9	bh¤!¹!L[!.[9
Y9Ð! ☞[! /Y☞ ⛲ /t!	わゐ うゑゐわ[illegible]	! ⊡[Y	D/	t[w		a	w		ォ		ゐ	ゑ	を								ろゐ			{![9!.[9		bh¤!¹!L[!.[9	bh¤!¹!L[!.[9
Y9Ð! ☞[! /Y☞ ⛲ /t!	わゐ うゑゐわ[illegible]	! ⊡[Y	D/	t[w		a	w		ォ	ォ	ゐ	ゑ									ろゐ	ろゑ		{![9!.[9		bh¤!¹!L[!.[9	bh¤!¹!L[!.[9
Y9Ð! ☞[! /Y☞ ⛲ /t!	わゐ うゑゐわ[illegible]	! ⊡[Y	D/	t[w		a	w		ォ	ォ								ろヹ			ろゐ	ろゑ		{![9!.[9		bh¤!¹!L[!.[9	bh¤!¹!L[!.[9
Y9Ð! ☞[! /Y☞ ⛲t!	わゐ うゑゐわ[illegible]	! ⊡[Y	D/	t[w	/t!	a	w		ォ					ん			ろォ			ろォ		ろゑ		{![9!.[9		bh¤!¹!L[!.[9	bh¤!¹!L[!.[9
Y9Ð! ☞[! /Y☞ ⛲ /t!	わゐ うゑゐわ[illegible]	! ⊡[Y	D/	t[w		a	w		ォ					ん										{![9!.[9		bh¤!¹!L[!.[9	bh¤!¹!L[!.[9
Y9Ð! ☞[! /Y☞ ⛲ /t!	わゐ うゑゐわ[illegible]	! ⊡[Y	D/	t[w		a	w		ォ	ォ							ろォ	ろヹ	ろォ	ろォ				{![9!.[9		bh¤!¹!L[!.[9	bh¤!¹!L[!.[9
Y9Ð! ☞[! /Y☞ ⛲ /t!	わゐ うゑゐわ[illegible]	! ⊡[Y	D/	t[w		a	w			ォ									ろォ	ろォ				{![9!.[9		bh¤!¹!L[!.[9	bh¤!¹!L[!.[9
Y9Ð! ☞[! /Y☞ ⛲ /t!	わゐ うゑゐわ[illegible]	! ⊡[Y	D/	t[w		a	w			ォ	ゐ		を	ん					ろォ	ろォ	ろゐ	ろゑ		{![9!.[9		bh¤!¹!L[!.[9	bh¤!¹!L[!.[9
Y9Ð! ☞[! /Y☞ ⛲t!	わゐ うゑゐわ[illegible]	! ⊡[Y	D/	t[w	/t!	a	w							ん			ろォ	ろヹ	ろォ	ろォ				{![9!.[9		bh¤!¹!L[!.[9	bh¤!¹!L[!.[9
Y9Ð! ☞[! /Y☞ ⛲ /t!	わゐ うゑゐわ[illegible]	! ⊡[Y	D/	t[w		a	w							ん								ろゑ		{![9!.[9		bh¤!¹!L[!.[9	bh¤!¹!L[!.[9
Y9Ð! ☞[! /Y☞ ⛲t!	わゐ うゑゐわ[illegible]	! ⊡[Y	D/	t[w	/t!	a	w						を	ん								ろゑ		{![9!.[9		bh¤!¹!L[!.[9	bh¤!¹!L[!.[9
Y9Ð! ☞[! /Y☞ ⛲t!	わゐ うゑゐわ[illegible]	! ⊡[Y	D/	t[w	/t!	a	w						を	ん			ろォ	ろヹ	ろォ	ろォ	ろゐ	ろゑ		{![9!.[9		bh¤!¹!L[!.[9	bh¤!¹!L[!.[9
Y9Ð! ☞[! /Y☞ ⛲ /t!	わゐ うゑゐわ[illegible]	! ⊡[Y	D/	t[w		a	w		ォ									ろヹ	ろォ					{![9!.[9		bh¤!¹!L[!.[9	bh¤!¹!L[!.[9
Y9Ð! ☞[! /Y☞ ⛲ /t!	わゐ うゑゐわ[illegible]	! ⊡[Y	D/	t[w		a	w		ォ								ろォ	ろヹ	ろォ					{![9!.[9		bh¤!¹!L[!.[9	bh¤!¹!L[!.[9
Y9Ð! ☞[! /Y☞ ⛲ /t!	わゐ うゑゐわ[illegible]	! ⊡[Y	D/	t[w		a	w		ォ								ろォ	ろヹ	ろォ	ろォ	ろゐ	ろゑ		{![9!.[9		bh¤!¹!L[!.[9	bh¤!¹!L[!.[9
Y9Ð! ☞[! /Y☞ ⛲ /t!	わゐ うゑゐわ[illegible]	! ⊡[Y	D/	t[w		a	w		ォ	ォ			を	ん			ろォ	ろヹ	ろォ	ろォ	ろゐ	ろゑ		{![9!.[9		bh¤!¹!L[!.[9	bh¤!¹!L[!.[9
Y9Ð! ☞[! /Y☞ ⛲ /t!	わゐ うゑゐわ[illegible]	! ⊡[Y	D/	t[w		a	w												ろォ		ろゐ			{![9!.[9		bh¤!¹!L[!.[9	bh¤!¹!L[!.[9
Y9Ð! ☞[! /Y☞ ⛲ /t!	わゐ うゑゐわ[illegible]	! ⊡[Y	D/	t[w		a	w		ォ	ォ										ろォ	ろゐ	ろゑ		{![9!.[9		bh¤!¹!L[!.[9	bh¤!¹!L[!.[9
Y9Ð! ☞[! /Y☞ ⛲t!	わゐ うゑゐわ[illegible]	! ⊡[Y	D/	t[w	/t!	a	w										ろォ							{![9!.[9		bh¤!¹!L[!.[9	bh¤!¹!L[!.[9
Y9Ð! ☞[! /Y☞ ⛲ /t!	わゐ うゑゐわ[illegible]	! ⊡[Y	D/	t[w		a	w		ォ	ォ			を	ん			ろォ			ろォ				{![9!.[9		bh¤!¹!L[!.[9	bh¤!¹!L[!.[9
Y9Ð! ☞[! /Y☞ ⛲ /t!	わゐ うゑゐわ[illegible]	! ⊡[Y	D/	t[w		a	w		ォ	ォ	ゐ	ゑ	を	ん				ろヹ	ろォ	ろォ	ろゐ			{![9!.[9		bh¤!¹!L[!.[9	bh¤!¹!L[!.[9
Y9Ð! ☞[! /Y☞ ⛲ /t!	わゐ うゑゐわ[illegible]	! ⊡[Y	D/	t[w		a	w		ォ	ォ	ゐ	ゑ	を	ん			ろォ	ろヹ	ろォ	ろォ	ろゐ			{![9!.[9		bh¤!¹!L[!.[9	bh¤!¹!L[!.[9
Y9Ð! ☞[! /Y☞ ⛲ /t!	わゐ うゑゐわ[illegible]	! ⊡[Y	D/	t[w		a	w				ゐ						ろォ	ろヹ	ろォ		ろゐ	ろゑ		{![9!.[9		bh¤!¹!L[!.[9	bh¤!¹!L[!.[9
Y9Ð. ☞[LDI ¤ Dw Ð☞ ⛲t!	わゐ うゑゐわ[illegible]	. ⅡD	D/	t[w	/t!	a	w		ォ	ォ									ろォ	ろォ	ろゐ	ろゑ		{![9!.[9		bh¤!¹!L[!.[9	bh¤!¹!L[!.[9
Y9Ð! ☞[! /Y☞ ⛲ /t!	わゐ うゑゐわ[illegible]	! ⊡[Y	D/	t[w		a	w		ォ								ろォ	ろヹ						{![9!.[9		bh¤!¹!L[!.[9	bh¤!¹!L[!.[9
Y9Ð! ☞[! /Y☞ ⛲ /t!	わゐ うゑゐわ[illegible]	! ⊡[Y	D/	t[w		a	w		ォ								ろォ	ろヹ			ろゐ	ろゑ		{![9!.[9		bh¤!¹!L[!.[9	bh¤!¹!L[!.[9
Y9Ð! ☞[! /Y☞ ⛲ /t!	わゐ うゑゐわ[illegible]	! ⊡[Y	D/	t[w		a	w		ォ	ォ							ろォ	ろヹ	ろォ	ろォ		ろゑ		{![9!.[9		bh¤!¹!L[!.[9	bh¤!¹!L[!.[9
Y9Ð! ☞[! /Y☞ ⛲ /t!	わゐ うゑゐわ[illegible]	! ⊡[Y	D/	t[w		a	w			ォ							ろォ	ろヹ	ろォ	ろォ		ろゑ		{![9!.[9		bh¤!¹!L[!.[9	bh¤!¹!L[!.[9
Y9Ð! ☞[! /Y☞ ⛲ /t!	わゐ うゑゐわ[illegible]	! ⊡[Y	D/	t[w		a	w		ォ	ォ							ろォ					ろゑ		{![9!.[9		bh¤!¹!L[!.[9	bh¤!¹!L[!.[9
Y9Ð! ☞[! /Y☞ ⛲ /t!	わゐ うゑゐわ[illegible]	! ⊡[Y	D/	t[w		a	w			ォ							ろォ					ろゑ		{![9!.[9		bh¤!¹!L[!.[9	bh¤!¹!L[!.[9
Y9Ð. ☞[LDI ¤ Dw Ð☞ ⛲ /t!	わゐ うゑゐわ[illegible]	. ⅡD	D/	t[w		a	w		ォ											ろォ	ろゐ	ろゑ		{![9!.[9		bh¤!¹!L[!.[9	bh¤!¹!L[!.[9
Y9Ð. ☞[LDI ¤ Dw Ð☞ ⛲ /t!	わゐ うゑゐわ[illegible]	. ⅡD	D/	t[w		a	w		ォ								ろォ	ろヹ	ろォ	ろォ	ろゐ	ろゑ		{![9!.[9		bh¤!¹!L[!.[9	bh¤!¹!L[!.[9
Y9Ð! ☞Ð9[[h° ☞ ⛲t!	わゐ うゑゐわ[illegible]	! ÐP	D/	t[w	/t!	a	w				ゐ			ん					ろォ	ろォ	ろゐ	ろゑ		{![9!.[9		bh¤!¹!L[!.[9	bh¤!¹!L[!.[9
Y9Ð! ☞[! /Y☞ ⛲ /t!	わゐ うゑゐわ[illegible]	! ⊡[Y	D/	t[w		a	w			ォ	ゐ						ろォ				ろゐ	ろゑ		{![9!.[9		bh¤!¹!L[!.[9	bh¤!¹!L[!.[9
Y9Ð! ☞[! /Y☞ ⛲t!	わゐ うゑゐわ[illegible]	! ⊡[Y	D/	t[w	/t!	a	w						を				ろォ		ろォ		ろゐ			{![9!.[9		bh¤!¹!L[!.[9	bh¤!¹!L[!.[9
Y9Ð! ☞[! /Y☞ ⛲ /t!	わゐ うゑゐわ[illegible]	! ⊡[Y	D/	t[w		a	w			ォ	ゐ	ゑ	を	ん								ろゑ		{![9!.[9		bh¤!¹!L[!.[9	bh¤!¹!L[!.[9
Y9Ð! ☞[! /Y☞ ⛲ /t!	わゐ うゑゐわ[illegible]	! ⊡[Y	D/	t[w		a	w		ォ	ォ	ゐ	ゑ	を	ん			ろォ		ろォ			ろゑ		{![9!.[9		bh¤!¹!L[!.[9	bh¤!¹!L[!.[9
Y9Ð! ☞[! /Y☞ ⛲ /t!	わゐ うゑゐわ[illegible]	! ⊡[Y	D/	t[w		a	w		ォ		ゐ		を	ん			ろォ	ろヹ	ろォ	ろォ	ろゐ	ろゑ		{![9!.[9		bh¤!¹!L[!.[9	bh¤!¹!L[!.[9
Y9Ð! ☞[! /Y☞ ⛲ /t!	わゐ うゑゐわ[illegible]	! ⊡[Y	D/	t[w		a	w		ォ	ォ		ゑ					ろォ	ろヹ	ろォ	ろォ	ろゐ	ろゑ		{![9!.[9		bh¤!¹!L[!.[9	bh¤!¹!L[!.[9
Y9Ð! ☞[! /Y☞ ⛲ /t!	わゐ うゑゐわ[illegible]	! ⊡[Y	D/	t[w		a	w		ォ	ォ		ゑ					ろォ		ろォ		ろゐ			{![9!.[9		bh¤!¹!L[!.[9	bh¤!¹!L[!.[9
Y9Ð! ☞[! /Y☞ ⛲ /t!	わゐ うゑゐわ[illegible]	! ⊡[Y	D/	t[w		a	w		ォ	ォ		ゑ					ろォ	ろヹ	ろォ	ろォ	ろゐ			{![9!.[9		bh¤!¹!L[!.[9	bh¤!¹!L[!.[9
Y9Ð! ☞[! /Y☞ ⛲ /t!	わゐ うゑゐわ[illegible]	! ⊡[Y	D/	t[w		a	w		ォ				を				ろォ					ろゑ		{![9!.[9		bh¤!¹!L[!.[9	bh¤!¹!L[!.[9
Y9Ð! ☞[! /Y☞ ⛲ /t!	わゐ うゑゐわ[illegible]	! ⊡[Y	D/	t[w		a	w		ォ								ろォ					ろゑ		{![9!.[9		bh¤!¹!L[!.[9	bh¤!¹!L[!.[9
Y9Ð! ☞[! /Y☞ ⛲ /t!	わゐ うゑゐわ[illegible]	! ⊡[Y	D/	t[w		a	w		ォ			ゑ	を	ん			ろォ	ろヹ		ろォ		ろゑ		{![9!.[9		bh¤!¹!L[!.[9	bh¤!¹!L[!.[9
Y9Ð! ☞[! /Y☞ ⛲ /t!	わゐ うゑゐわ[illegible]	! ⊡[Y	D/	t[w		a	w						を	ん								ろゑ		{![9!.[9		bh¤!¹!L[!.[9	bh¤!¹!L[!.[9
Y9Ð! ☞[! /Y☞ ⛲ /t!	わゐ うゑゐわ[illegible]	! ⊡[Y	D/	t[w		a	w		ォ				を					ろヹ	ろォ	ろォ				{![9!.[9		bh¤!¹!L[!.[9	bh¤!¹!L[!.[9
Y9Ð! ☞[! /Y☞ ⛲ /t!	わゐ うゑゐわ[illegible]	! ⊡[Y	D/	t[w		a	w		ォ			ゑ		ん			ろォ	ろヹ		ろォ		ろゑ		{![9!.[9		bh¤!¹!L[!.[9	bh¤!¹!L[!.[9
Y9Ð! ☞[! /Y☞ ⛲ /t!	わゐ うゑゐわ[illegible]	! ⊡[Y	D/	t[w		a	w		ォ					ん			ろォ			ろォ	ろゐ	ろゑ		{![9!.[9		bh¤!¹!L[!.[9	bh¤!¹!L[!.[9
Y9Ð! ☞[! /Y☞ ⛲ /t!	わゐ うゑゐわ[illegible]	! ⊡[Y	D/	t[w		a	w		ォ	ォ		ゑ		ん			ろォ	ろヹ		ろォ	ろゐ	ろゑ		{![9!.[9		bh¤!¹!L[!.[9	bh¤!¹!L[!.[9
Y9Ð! ☞[! /Y☞ ⛲ /t!	わゐ うゑゐわ[illegible]	! ⊡[Y	D/	t[w		a	w			ォ	ゐ		を	ん				ろヹ	ろォ			ろゑ		{![9!.[9		bh¤!¹!L[!.[9	bh¤!¹!L[!.[9
Y9Ð! ☞[! /Y☞ ⛲ /t!	わゐ うゑゐわ[illegible]	! ⊡[Y	D/	t[w		a	w			ォ	ゐ			ん				ろヹ	ろォ			ろゑ		{![9!.[9		bh¤!¹!L[!.[9	bh¤!¹!L[!.[9
Y9Ð. ☞[LDI ¤ Dw Ð☞ ⛲ /t!	わゐ うゑゐわ[illegible]	. ⅡD	D/	t[w		a	w							ん			ろォ	ろヹ	ろォ	ろォ	ろゐ	ろゑ		{![9!.[9		bh¤!¹!L[!.[9	bh¤!¹!L[!.[9
Y9Ð. ☞[LDI ¤ Dw Ð☞ ⛲ /t!	わゐ うゑゐわ[illegible]	. ⅡD	D/	t[w		a	w		ォ	ォ	ゐ	ゑ	を	ん			ろォ	ろヹ		ろォ	ろゐ	ろゑ		{![9!.[9		bh¤!¹!L[!.[9	bh¤!¹!L[!.[9
Y9Ð. ☞[LDI ¤ Dw Ð☞ ⛲ /t!	わゐ うゑゐわ[illegible]	. ⅡD	D/	t[w		a	w				ゐ	ゑ					ろォ	ろヹ	ろォ	ろォ		ろゑ		{![9!.[9		bh¤!¹!L[!.[9	bh¤!¹!L[!.[9
Y9Ð. ☞[LDI ¤ Dw Ð☞ ⛲ /t!	わゐ うゑゐわ[illegible]	. ⅡD	D/	t[w		a	w		ォ	ォ	ゐ	ゑ					ろォ	ろヹ	ろォ			ろゑ		{![9!.[9		bh¤!¹!L[!.[9	bh¤!¹!L[!.[9
Y9Ð. ☞[LDI ¤ Dw Ð☞ ⛲ /t!	わゐ うゑゐわ[illegible]	. ⅡD	D/	t[w		a	w		ォ	ォ	ゐ	ゑ	を	ん				ろヹ		ろォ	ろゐ	ろゑ		{![9!.[9		bh¤!¹!L[!.[9	bh¤!¹!L[!.[9
Y9Ð. ☞[LDI ¤ Dw Ð☞ ⛲ /t!	わゐ うゑゐわ[illegible]	. ⅡD	D/	t[w		a	w		ォ	ォ	ゐ	ゑ	を	ん				ろヹ	ろォ	ろォ	ろゐ	ろゑ		{![9!.[9		bh¤!¹!L[!.[9	bh¤!¹!L[!.[9
Y9Ð. ☞[LDI ¤ Dw Ð☞ ⛲ /t!	わゐ うゑゐわ[illegible]	. ⅡD	D/	t[w		a	w		ォ	ォ	ゐ	ゑ	を	ん			ろォ	ろヹ	ろォ	ろォ	ろゐ			{![9!.[9		bh¤!¹!L[!.[9	bh¤!¹!L[!.[9
Y9Ð. ☞[LDI ¤ Dw Ð☞ ⛲ /t!	わゐ うゑゐわ[illegible]	. ⅡD	D/	t[w		a	w						を									ろゑ		{![9!.[9		bh¤!¹!L[!.[9	bh¤!¹!L[!.[9
Y9Ð. ☞[LDI ¤ Dw Ð☞ ⛲ /t!	わゐ うゑゐわ[illegible]	. ⅡD	D/	t[w		a	w						を				ろォ	ろヹ	ろォ	ろォ		ろゑ		{![9!.[9		bh¤!¹!L[!.[9	bh¤!¹!L[!.[9
Y9Ð. ☞[LDI ¤ Dw Ð☞ ⛲ /t!	わゐ うゑゐわ[illegible]	. ⅡD	D/	t[w		a	w						を					ろヹ	ろォ	ろォ		ろゑ		{![9!.[9		bh¤!¹!L[!.[9	bh¤!¹!L[!.[9
Y9Ð. ☞[LDI ¤ Dw Ð☞ ⛲ /t!	わゐ うゑゐわ[illegible]	. ⅡD	D/	t[w		a	w										ろォ	ろヹ	ろォ			ろゑ		{![9!.[9		bh¤!¹!L[!.[9	bh¤!¹!L[!.[9
Y9Ð. ☞[LDI ¤ Dw Ð☞ ⛲ /t!	わゐ うゑゐわ[illegible]	. ⅡD	D/	t[w		a	w						を				ろォ	ろヹ	ろォ	ろォ				{![9!.[9		bh¤!¹!L[!.[9	bh¤!¹!L[!.[9
Y9Ð. ☞[LDI ¤ Dw Ð☞ ⛲ /t!	わゐ うゑゐわ[illegible]	. ⅡD	D/	t[w		a	w		ォ			ゑ		ん			ろォ	ろヹ		ろォ	ろゐ	ろゑ		{![9!.[9		bh¤!¹!L[!.[9	bh¤!¹!L[!.[9
Y9Ð. ☞[LDI ¤ Dw Ð☞ ⛲ /t!	わゐ うゑゐわ[illegible]	. ⅡD	D/	t[w		a	w		ォ	ォ	ゐ	ゑ		ん			ろォ	ろヹ		ろォ	ろゐ	ろゑ		{![9!.[9		bh¤!¹!L[!.[9	bh¤!¹!L[!.[9
Y9Ð. ☞[LDI ¤ Dw Ð☞ ⛲ /t!	わゐ うゑゐわ[illegible]	. ⅡD	D/	t[w		a	w			ォ	ゐ		を						ろォ					{![9!.[9		bh¤!¹!L[!.[9	bh¤!¹!L[!.[9
Y9Ð! ☞[! /Y☞ ⛲t!	わゐ うゑゐわ[illegible]	! ⊡[Y	D/	t[w	/t!	a	w						を						ろォ					{![9!.[9		bh¤!¹!L[!.[9	bh¤!¹!L[!.[9
Y9Ð! ☞[! /Y☞ ⛲t!	わゐ うゑゐわ[illegible]	! ⊡[Y	D/	t[w	/t!	a	w				ゐ	ゑ	を				ろォ		ろォ	ろォ	ろゐ			{![9!.[9		bh¤!¹!L[!.[9	bh¤!¹!L[!.[9
Y9Ð! ☞[! /Y☞ ⛲ /t!	わゐ うゑゐわ[illegible]	! ⊡[Y	D/	t[w		a	w		ォ		ゐ	ゑ					ろォ		ろォ	ろォ	ろゐ	ろゑ		{![9!.[9		bh¤!¹!L[!.[9	bh¤!¹!L[!.[9
Y9Ð! ☞[! /Y☞ ⛲ /t!	わゐ うゑゐわ[illegible]	! ⊡[Y	D/	t[w		a	w		ォ												ろゐ	ろゑ		{![9!.[9		bh¤!¹!L[!.[9	bh¤!¹!L[!.[9
Y9Ð! ☞[! /Y☞ ⛲t!	わゐ うゑゐわ[illegible]	! ⊡[Y	D/	t[w	/t!	a	w						を				ろォ							{![9!.[9		bh¤!¹!L[!.[9	bh¤!¹!L[!.[9
Y9Ð! ☞[! /Y☞ ⛲t!	わゐ うゑゐわ[illegible]	! ⊡[Y	D/	t[w	/t!	a	w		ォ	ォ	ゐ		を					ろヹ	ろォ					{![9!.[9		bh¤!¹!L[!.[9	bh¤!¹!L[!.[9
Y9Ð! ☞[! /Y☞ ⛲ /t!	わゐ うゑゐわ[illegible]	! ⊡[Y	D/	t[w		a	w					ゑ	を				ろォ			ろォ				{![9!.[9		bh¤!¹!L[!.[9	bh¤!¹!L[!.[9
Y9Ð! ☞[! /Y☞ ⛲ /t!	わゐ うゑゐわ[illegible]	! ⊡[Y	D/	t[w		a	w										ろォ			ろォ				{![9!.[9		bh¤!¹!L[!.[9	bh¤!¹!L[!.[9
Y9Ð! ☞[! /Y☞ ⛲ /t!	わゐ うゑゐわ[illegible]	! ⊡[Y	D/	t[w		a	w		ォ				を				ろォ							{![9!.[9		bh¤!¹!L[!.[9	bh¤!¹!L[!.[9
Y9Ð! ☞[! /Y☞ ⛲ /t!	わゐ うゑゐわ[illegible]	! ⊡[Y	D/	t[w		a	w		ォ								ろォ							{![9!.[9		bh¤!¹!L[!.[9	bh¤!¹!L[!.[9
Y9Ð! ☞[! /Y☞ ⛲ /t!	わゐ うゑゐわ[illegible]	! ⊡[Y	D/	t[w		a	w		ォ		ゐ	ゑ	を	ん			ろォ	ろヹ	ろォ	ろォ		ろゑ		{![9!.[9		bh¤!¹!L[!.[9	bh¤!¹!L[!.[9
Y9Ð! ☞[! /Y☞ ⛲ /t!	わゐ うゑゐわ[illegible]	! ⊡[Y	D/	t[w		a	w		ォ			ゑ	を				ろォ	ろヹ	ろォ	ろォ				{![9!.[9		bh¤!¹!L[!.[9	bh¤!¹!L[!.[9
Y9Ð! ☞[! /Y☞ ⛲ /t!	わゐ うゑゐわ[illegible]	! ⊡[Y	D/	t[w		a	w		ォ		ゐ			ん			ろォ	ろヹ	ろォ	ろォ		ろゑ		{![9!.[9		bh¤!¹!L[!.[9	bh¤!¹!L[!.[9
Y9Ð! ☞[! /Y☞ ⛲ /t!	わゐ うゑゐわ[illegible]	! ⊡[Y	D/	t[w		a	w		ォ								ろォ	ろヹ	ろォ	ろォ				{![9!.[9		bh¤!¹!L[!.[9	bh¤!¹!L[!.[9
Y9Ð! ☞[! /Y☞ ⛲ /t!	わゐ うゑゐわ[illegible]	! ⊡[Y	D/	t[w		a	w		ォ			ゑ	を				ろォ	ろヹ	ろォ	ろォ	ろゐ			{![9!.[9		bh¤!¹!L[!.[9	bh¤!¹!L[!.[9
Y9Ð! ☞[! /Y☞ ⛲ /t!	わゐ うゑゐわ[illegible]	! ⊡[Y	D/	t[w		a	w		ォ		ゐ			ん			ろォ	ろヹ	ろォ	ろォ	ろゐ	ろゑ		{![9!.[9		bh¤!¹!L[!.[9	bh¤!¹!L[!.[9
Y9Ð! ☞[! /Y☞ ⛲ /t!	わゐ うゑゐわ[illegible]	! ⊡[Y	D/	t[w		a	w		ォ								ろォ	ろヹ	ろォ	ろォ	ろゐ			{![9!.[9		bh¤!¹!L[!.[9	bh¤!¹!L[!.[9
Y9Ð! ☞[! /Y☞ ⛲ /t!	わゐ うゑゐわ[illegible]	! ⊡[Y	D/	t[w		a	w		ォ	ォ		ゑ	を				ろォ	ろヹ	ろォ	ろォ	ろゐ			{![9!.[9		bh¤!¹!L[!.[9	bh¤!¹!L[!.[9
Y9Ð! ☞[! /Y☞ ⛲ /t!	わゐ うゑゐわ[illegible]	! ⊡[Y	D/	t[w		a	w		ォ	ォ							ろォ	ろヹ	ろォ	ろォ	ろゐ			{![9!.[9		bh¤!¹!L[!.[9	bh¤!¹!L[!.[9

a Æろゑれろを° !ÐIÐ.wL5 w9/9t¤!/[9{9![95!{{9a.[Ða!¤{9![° L¤Ih-¤/[Lt{[h¤☞わろI I/!¹L¤L9{ht9b、
.ha !b5 tLb h-¤{I 99¤

!{{9a.[Ð59(/wLt¤Lhb	!{{9a.[Ðt!w¤ b-a.9w	/ha thb9b¤ ¤I 9tw9{9b/9hC!b!..w9¹L!¤Lhb Lb5L/!¤9{ ¤I 9tw9{9b/9hC¤I!¤ /ha thb9b¤♔						.[h/Y95 ¤9wa Lb![{ /!¹L¤Ð° L¤I ! b-a.9wLb5L/!¤9{ .[h/Y95 ¤9wa Lb![th{L¤Lhb /!¹L¤Ð° L¤I h-¤! b-a.9wLb5L/!¤9{ ht9b ¤9wa Lb![th{L¤Lhb																{¤!¤-{	/ha a 9b¤{	ht¤Lhb![!¤¤!¤/I a 9b¤{ {h[5 {9t9w!¤9[Ð	
		Ih-{LbD Y9Ð巡h[hw	Dwha a 9¤ /!t	t[w	/t!	a!¤{9![	wLbD {9![	ろ	ゎ	わ	ゐ	ゑ	を	ん	ゔ	゛	ろれ	ろろ	ろゎ	ろわ	ろゐ	ろゑ	ろを			.!/Y{I 9[[° L¤I wL{	.!/Y{I 9[[° L¤I h-¤ wL{
Y9Ð!☞[!/Y☞ 瓜/t!	わゐ ゔゑゐろ	!⊡[Y	D/	t[w		a	w				ƌ	ゑ	を								ろゐ	ろゑ		{![9!.[9		bh¤!¹!L[!.[9	bh¤!¹!L[!.[9
Y9Ð!☞[!/Y☞ 瓜/t!	わゐ ゔゑゐろ	!⊡[Y	D/	t[w		a	w					ゑ	を								ろゐ	ろゑ		{![9!.[9		bh¤!¹!L[!.[9	bh¤!¹!L[!.[9
Y9Ð!☞[!/Y☞ 瓜/t!	わゐ ゔゑゐろ	!⊡[Y	D/	t[w		a	w				ƌ	ゑ	を									ろゑ		{![9!.[9		bh¤!¹!L[!.[9	bh¤!¹!L[!.[9
Y9Ð.☞[LDI¤Dw.Ð☞ 瓜/t!	わゐ ゔゑゐろ	.[ED	D/	t[w		a	w					ゑ	を	ん					ろォ	ろォ				{![9!.[9		bh¤!¹!L[!.[9	bh¤!¹!L[!.[9
Y9Ð.☞[LDI¤Dw.Ð☞ 瓜/t!	わゐ ゔゑゐろ	.[ED	D/	t[w		a	w						を	ん				ろエ				ろゑ		{![9!.[9		bh¤!¹!L[!.[9	bh¤!¹!L[!.[9
Y9Ð.☞[LDI¤Dw.Ð☞ 瓜/t!	わゐ ゔゑゐろ	.[ED	D/	t[w		a	w				ƌ	ゑ						ろエ	ろォ	ろォ		ろゑ		{![9!.[9		bh¤!¹!L[!.[9	bh¤!¹!L[!.[9
Y9Ð.☞[LDI¤Dw.Ð☞ 瓜/t!	わゐ ゔゑゐろ	.[ED	D/	t[w		a	w						を	ん			ろォ	ろエ			ろゐ	ろゑ		{![9!.[9		bh¤!¹!L[!.[9	bh¤!¹!L[!.[9
Y9Ð.☞[LDI¤Dw.Ð☞ 瓜/t!	わゐ ゔゑゐろ	.[ED	D/	t[w		a	w					ゑ	を	ん			ろォ	ろエ	ろォ	ろォ	ろゐ			{![9!.[9		bh¤!¹!L[!.[9	bh¤!¹!L[!.[9
Y9Ð.☞[LDI¤Dw.Ð☞ 瓜/t!	わゐ ゔゑゐろ	.[ED	D/	t[w		a	w					ゑ	を	ん				ろエ	ろォ	ろォ				{![9!.[9		bh¤!¹!L[!.[9	bh¤!¹!L[!.[9
Y9Ð.☞[LDI¤Dw.Ð☞ 瓜/t!	わゐ ゔゑゐろ	.[ED	D/	t[w		a	w					ゑ	を								ろゐ			{![9!.[9		bh¤!¹!L[!.[9	bh¤!¹!L[!.[9
Y9Ð.☞[LDI¤Dw.Ð☞ 瓜/t!	わゐ ゔゑゐろ	.[ED	D/	t[w		a	w		ォ		ƌ	ゑ	を	ん			ろォ	ろエ	ろォ	ろォ	ろゐ	ろゑ		{![9!.[9		bh¤!¹!L[!.[9	bh¤!¹!L[!.[9
Y9Ð.☞[LDI¤Dw.Ð☞ 瓜/t!	わゐ ゔゑゐろ	.[ED	D/	t[w		a	w		ォ		ƌ	ゑ	を	ん				ろエ			ろゐ			{![9!.[9		bh¤!¹!L[!.[9	bh¤!¹!L[!.[9
Y9Ð.☞[LDI¤Dw.Ð☞ 瓜/t!	わゐ ゔゑゐろ	.[ED	D/	t[w		a	w		ォ		ƌ	ゑ	を								ろゐ			{![9!.[9		bh¤!¹!L[!.[9	bh¤!¹!L[!.[9
Y9Ð.☞[LDI¤Dw.Ð☞ 瓜/t!	わゐ ゔゑゐろ	.[ED	D/	t[w		a	w					ゑ	を	ん				ろエ			ろゐ			{![9!.[9		bh¤!¹!L[!.[9	bh¤!¹!L[!.[9
Y9Ð.☞[LDI¤Dw.Ð☞ 瓜/t!	わゐ ゔゑゐろ	.[ED	D/	t[w		a	w		ォ		ƌ	ゑ	を	ん			ろォ	ろエ	ろォ	ろォ	ろゐ			{![9!.[9		bh¤!¹!L[!.[9	bh¤!¹!L[!.[9
Y9Ð.☞[LDI¤Dw.Ð☞ 瓜/t!	わゐ ゔゑゐろ	.[ED	D/	t[w		a	w					ゑ	を				ろォ			ろォ				{![9!.[9		bh¤!¹!L[!.[9	bh¤!¹!L[!.[9
Y9Ð.☞[LDI¤Dw.Ð☞ 瓜/t!	わゐ ゔゑゐろ	.[ED	D/	t[w		a	w							ん				ろエ			ろゐ			{![9!.[9		bh¤!¹!L[!.[9	bh¤!¹!L[!.[9
Y9Ð.☞[LDI¤Dw.Ð☞ 瓜/t!	わゐ ゔゑゐろ	.[ED	D/	t[w		a	w														ろゐ			{![9!.[9		bh¤!¹!L[!.[9	bh¤!¹!L[!.[9
Y9Ð.☞[LDI¤Dw.Ð☞ 瓜/t!	わゐ ゔゑゐろ	.[ED	D/	t[w		a	w							ん			ろォ	ろエ	ろォ	ろォ	ろゐ			{![9!.[9		bh¤!¹!L[!.[9	bh¤!¹!L[!.[9
Y9Ð.☞[LDI¤Dw.Ð☞ 瓜/t!	わゐ ゔゑゐろ	.[ED	D/	t[w		a	w				ƌ										ろゐ			{![9!.[9		bh¤!¹!L[!.[9	bh¤!¹!L[!.[9
Y9Ð.☞[LDI¤Dw.Ð☞ 瓜/t!	わゐ ゔゑゐろ	.[ED	D/	t[w		a	w				ƌ			ん				ろエ			ろゐ			{![9!.[9		bh¤!¹!L[!.[9	bh¤!¹!L[!.[9
Y9Ð.☞[LDI¤Dw.Ð☞ 瓜/t!	わゐ ゔゑゐろ	.[ED	D/	t[w		a	w				ƌ			ん			ろォ	ろエ	ろォ	ろォ	ろゐ			{![9!.[9		bh¤!¹!L[!.[9	bh¤!¹!L[!.[9
Y9Ð.☞[LDI¤Dw.Ð☞ 瓜/t!	わゐ ゔゑゐろ	.[ED	D/	t[w		a	w										ろォ	ろエ	ろォ	ろォ				{![9!.[9		bh¤!¹!L[!.[9	bh¤!¹!L[!.[9
Y9Ð.☞[LDI¤Dw.Ð☞ 瓜/t!	わゐ ゔゑゐろ	.[ED	D/	t[w		a	w															ろゑ		{![9!.[9		bh¤!¹!L[!.[9	bh¤!¹!L[!.[9
Y9Ð!☞[!/Y☞ 巡t!	わゐ ゔゑゐろ	!⊡[Y	D/	t[w	/t!	a	w		ォ		ƌ			ん			ろォ		ろォ			ろゑ		{![9!.[9		bh¤!¹!L[!.[9	bh¤!¹!L[!.[9
Y9Ð!☞[!/Y☞ 瓜/t!	わゐ ゔゑゐろ	!⊡[Y	D/	t[w		a	w				ƌ	ゑ		ん					ろォ	ろォ				{![9!.[9		bh¤!¹!L[!.[9	bh¤!¹!L[!.[9
Y9Ð!☞[!/Y☞ 瓜/t!	わゐ ゔゑゐろ	!⊡[Y	D/	t[w		a	w			ォ		ゑ	を				ろォ			ろォ	ろゐ			{![9!.[9		bh¤!¹!L[!.[9	bh¤!¹!L[!.[9
Y9Ð!☞[!/Y☞ 瓜/t!	わゐ ゔゑゐろ	!⊡[Y	D/	t[w		a	w			ォ							ろォ			ろォ	ろゐ			{![9!.[9		bh¤!¹!L[!.[9	bh¤!¹!L[!.[9
Y9Ð!☞[!/Y☞ 瓜/t!	わゐ ゔゑゐろ	!⊡[Y	D/	t[w		a	w		ォ			ゑ	を								ろゐ	ろゑ		{![9!.[9		bh¤!¹!L[!.[9	bh¤!¹!L[!.[9
Y9Ð!☞[!/Y☞ 瓜/t!	わゐ ゔゑゐろ	!⊡[Y	D/	t[w		a	w			ォ	ƌ	ゑ	を	ん			ろォ	ろエ						{![9!.[9		bh¤!¹!L[!.[9	bh¤!¹!L[!.[9
Y9Ð!☞[!/Y☞ 瓜/t!	わゐ ゔゑゐろ	!⊡[Y	D/	t[w		a	w		ォ				を				ろォ	ろエ	ろォ					{![9!.[9		bh¤!¹!L[!.[9	bh¤!¹!L[!.[9
Y9Ð!☞[!/Y☞ 瓜/t!	わゐ ゔゑゐろ	!⊡[Y	D/	t[w		a	w				ƌ		を	ん			ろォ							{![9!.[9		bh¤!¹!L[!.[9	bh¤!¹!L[!.[9
Y9Ð!☞[!/Y☞ 瓜/t!	わゐ ゔゑゐろ	!⊡[Y	D/	t[w		a	w			ォ	ƌ		を	ん				ろエ	ろォ		ろゐ	ろゑ		{![9!.[9		bh¤!¹!L[!.[9	bh¤!¹!L[!.[9
Y9Ð!☞[!/Y☞ 瓜/t!	わゐ ゔゑゐろ	!⊡[Y	D/	t[w		a	w		ォ		ƌ	ゑ	を				ろォ	ろエ			ろゐ	ろゑ		{![9!.[9		bh¤!¹!L[!.[9	bh¤!¹!L[!.[9
Y9Ð!☞[!/Y☞ 瓜/t!	わゐ ゔゑゐろ	!⊡[Y	D/	t[w		a	w		ォ		ƌ	ゑ	を								ろゐ	ろゑ		{![9!.[9		bh¤!¹!L[!.[9	bh¤!¹!L[!.[9
Y9Ð!☞[!/Y☞ 瓜/t!	わゐ ゔゑゐろ	!⊡[Y	D/	t[w		a	w		ォ		ƌ										ろゐ	ろゑ		{![9!.[9		bh¤!¹!L[!.[9	bh¤!¹!L[!.[9
Y9Ð!☞[!/Y☞ 瓜/t!	わゐ ゔゑゐろ	!⊡[Y	D/	t[w		a	w				ƌ	ゑ	を				ろォ	ろエ			ろゐ	ろゑ		{![9!.[9		bh¤!¹!L[!.[9	bh¤!¹!L[!.[9
Y9Ð!☞[!/Y☞ 瓜/t!	わゐ ゔゑゐろ	!⊡[Y	D/	t[w		a	w				ƌ										ろゐ	ろゑ		{![9!.[9		bh¤!¹!L[!.[9	bh¤!¹!L[!.[9
Y9Ð!☞[!/Y☞ 巡t!	わゐ ゔゑゐろ	!⊡[Y	D/	t[w	/t!	a	w													ろォ	ろゐ	ろゑ		{![9!.[9		bh¤!¹!L[!.[9	bh¤!¹!L[!.[9
Y9Ð!☞[!/Y☞ 巡t!	わゐ ゔゑゐろ	!⊡[Y	D/	t[w	/t!	a	w										ろォ	ろエ	ろォ					{![9!.[9		bh¤!¹!L[!.[9	bh¤!¹!L[!.[9
Y9Ð.☞[LDI¤Dw.Ð☞ 巡t!	わゐ ゔゑゐろ	.[ED	D/	t[w	/t!	a	w		ォ				を	ん			ろォ	ろエ	ろォ	ろォ	ろゐ	ろゑ		{![9!.[9		bh¤!¹!L[!.[9	bh¤!¹!L[!.[9
Y9Ð.☞[LDI¤Dw.Ð☞ 巡t!	わゐ ゔゑゐろ	.[ED	D/	t[w	/t!	a	w						を				ろォ	ろエ	ろォ	ろォ				{![9!.[9		bh¤!¹!L[!.[9	bh¤!¹!L[!.[9
Y9Ð.☞[LDI¤Dw.Ð☞ 瓜/t!	わゐ ゔゑゐろ	.[ED	D/	t[w		a	w											ろエ	ろォ	ろォ				{![9!.[9		bh¤!¹!L[!.[9	bh¤!¹!L[!.[9
Y9Ð!☞[!/Y☞ 瓜/t!	わゐ ゔゑゐろ	!⊡[Y	D/	t[w		a	w										ろォ				ろゐ			{![9!.[9		bh¤!¹!L[!.[9	bh¤!¹!L[!.[9
Y9Ð!☞[!/Y☞ 瓜/t!	わゐ ゔゑゐろ	!⊡[Y	D/	t[w		a	w							ん			ろォ	ろエ	ろォ	ろォ	ろゐ			{![9!.[9		bh¤!¹!L[!.[9	bh¤!¹!L[!.[9
Y9Ð!☞[!/Y☞ 瓜/t!	わゐ ゔゑゐろ	!⊡[Y	D/	t[w		a	w		ォ	ォ			を	ん							ろゐ	ろゑ		{![9!.[9		bh¤!¹!L[!.[9	bh¤!¹!L[!.[9
Y9Ð!☞[!/Y☞ 瓜/t!	わゐ ゔゑゐろ	!⊡[Y	D/	t[w		a	w		ォ					ん							ろゐ	ろゑ		{![9!.[9		bh¤!¹!L[!.[9	bh¤!¹!L[!.[9
Y9Ð!☞[!/Y☞ 瓜/t!	わゐ ゔゑゐろ	!⊡[Y	D/	t[w		a	w							ん			ろォ							{![9!.[9		bh¤!¹!L[!.[9	bh¤!¹!L[!.[9
Y9Ð!☞[!/Y☞ 瓜/t!	わゐ ゔゑゐろ	!⊡[Y	D/	t[w		a	w		ォ					ん			ろォ			ろォ	ろゐ			{![9!.[9		bh¤!¹!L[!.[9	bh¤!¹!L[!.[9
Y9Ð!☞[!/Y☞ 瓜/t!	わゐ ゔゑゐろ	!⊡[Y	D/	t[w		a	w							ん			ろォ		ろォ	ろォ	ろゐ	ろゑ		{![9!.[9		bh¤!¹!L[!.[9	bh¤!¹!L[!.[9
Y9Ð!☞[!/Y☞ 瓜/t!	わゐ ゔゑゐろ	!⊡[Y	D/	t[w		a	w					ゑ					ろォ	ろエ	ろォ					{![9!.[9		bh¤!¹!L[!.[9	bh¤!¹!L[!.[9
Y9Ð!☞[!/Y☞ 瓜/t!	わゐ ゔゑゐろ	!⊡[Y	D/	t[w		a	w							ん			ろォ	ろエ		ろォ	ろゐ	ろゑ		{![9!.[9		bh¤!¹!L[!.[9	bh¤!¹!L[!.[9
Y9Ð!☞[!/Y☞ 瓜/t!	わゐ ゔゑゐろ	!⊡[Y	D/	t[w		a	w		ォ	ォ		ゑ	を	ん			ろォ	ろエ	ろォ	ろォ	ろゐ	ろゑ		{![9!.[9		bh¤!¹!L[!.[9	bh¤!¹!L[!.[9
Y9Ð!☞[!/Y☞ 瓜/t!	わゐ ゔゑゐろ	!⊡[Y	D/	t[w		a	w												ろォ	ろォ				{![9!.[9		bh¤!¹!L[!.[9	bh¤!¹!L[!.[9
Y9Ð.☞[LDI¤Dw.Ð☞ 瓜/t!	わゐ ゔゑゐろ	.[ED	D/	t[w		a	w						を	ん					ろォ	ろォ	ろゐ	ろゑ		{![9!.[9		bh¤!¹!L[!.[9	bh¤!¹!L[!.[9

molex

a ÆZ3ÐÐ ! ÐI Ð. wL5 w9/9t ¤! /[9{9! [95 ! {{9a . [Ða ! ¤{9! [° L¤I /[Lt{[h¤¤わ I I /! ¹ L¤L9{ ht 9b、 . ha ! b5 t Lb h- ¤{I 99¤

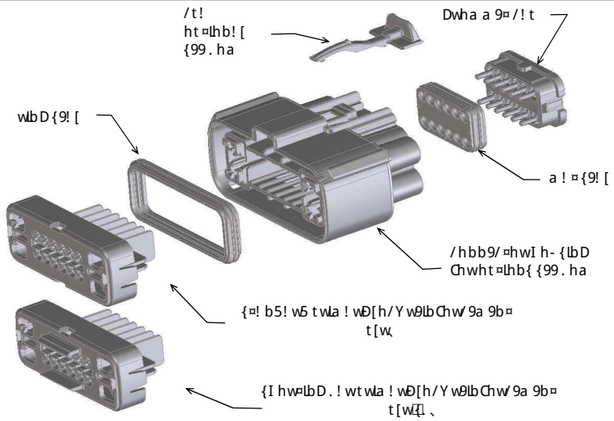

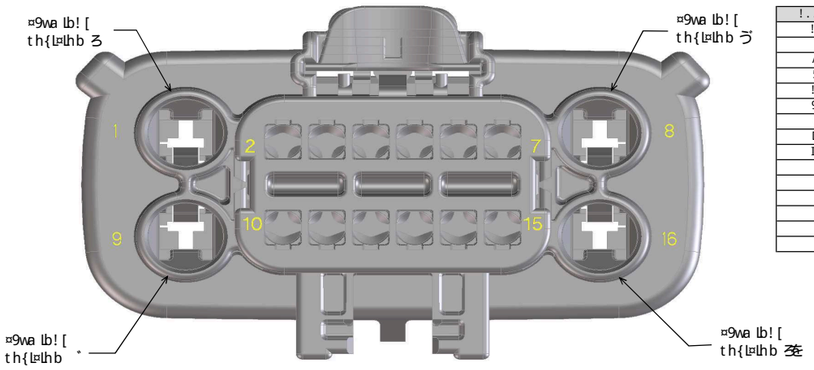

!..w9! L ¤lhb	59(/wLt ¤lhb	/h[hw	a ! ¤9wL! [
! :[Y/Z[Lt	I h- {lbD¤¥9ÐlbD ht ¤lhb ! ° L¤I /[Lt{[h¤	. [! /Y	{t{ abE[hb DC#ff
. [D/Z[Lt	I h- {lbD¤¥9ÐlbD ht ¤lhb . ° L¤I /[Lt{[h¤	[lD! ¤ Dw! E	{t{ abE[hb DC#ff
/ 5D/Z[Lt	I h- {lbD¤¥9ÐlbD ht ¤lhb / ° L¤I /[Lt{[h¤	5! wY Dw! E	{t{ abE[hb DC#ff
5 [D/Z[Lt	I h- {lbD¤¥9ÐlbD ht ¤lhb 5 ° L¤I /[Lt{[h¤	{¤hb9 Dw! E	{t{ abE[hb DC#ff
! Ð° /Z[Lt	I h- {lbD¤¥9ÐlbD ht ¤lhb ! ° L¤I /[Lt{[h¤	Ð9[[h°	{t{ abE[hb DC#ff
9 :[Y/Z[Lt	I h- {lbD¤¥9ÐlbD ht ¤lhb 9 ° L¤I /[Lt{[h¤	. [! /Y	{t{ abE[hb DC#ff
C[D/Z[Lt	I h- {lbD¤¥9ÐlbD ht ¤lhb C ° L¤I /[Lt{[h¤	[lD! ¤ Dw! E	{t{ abE[hb DC#ff
D 5D/Z[Lt	I h- {lbD¤¥9ÐlbD ht ¤lhb D ° L¤I /[Lt{[h¤	5! wY Dw! E	{t{ abE[hb DC#ff
I Ð° /Z[Lt	I h- {lbD¤¥9ÐlbD ht ¤lhb I ° L¤I /[Lt{[h¤	Ð9[[h°	{t{ abE[hb DC#ff
D/	Dwha a 9¤ /! t	. [! /Y	{t{ abE[hb DC#ff
t[w	{¤! b5! w5 t[w	b! ¤- wl [	{t{ abE[hb DC#ff
t[w£l	{I hw¤lbD. ! wt[w	b! ¤- wl [	t. ¤ DC2ff
/t!	/t!	w95	t. ¤ DC#ff
a	a ! ¤ {9! [	wh E[. [- 9	lbI 9w9b¤[Ð[- . wL/! ¤95 {lL/hb9
w	wlbD {9! [	Dw99b	lbI 9w9b¤[Ð[- . wL/! ¤95 {lL/hb9

!{{9a . [Ð59(/wLt ¤lhb	!{{9a . [Ðt! w¤ b- a . 9w	/ha thb9b¤						. [h/Y95 ¤9wa lb! [{															{¤! ¤- {	/ha a 9b¤{	ht ¤lhb! [! ¤¤! ¤/I a 9b¤{ {h[5 {9t 9wl ¤9[Ð	
		¤I 9tw9{9b/9hC! b! . . w9! L ¤lhb lb5L/! ¤9{ ¤I 9tw9{9b/9hC¤I! ¤ /ha thb9b¤						/! ¹ L¤Ð° L¤I ! b- a . 9wlb5L/! ¤9{ . [h/Y95 ¤9wa lb! [t h{L¤lhb /! ¹ L¤Ð° L¤I h- ¤! b- a . 9wlb5L/! ¤9{ ht 9b ¤9wa lb! [t h{L¤lhb																			
		I h- {lbD Y9Ð¥h[hw	Dwha a 9¤ /! t	t[w	/t!	a ! ¤ {9! [	wlbD {9! [	ろ	わ	わ	ゐ	ゑ	を	ん	う	゛	ゔれ	ゔろ	ゔわ	ゔわ	ゔゐ	ゔゑ	ゔを			. ! /Y{I 9[[° L¤I wL {	. ! /Y{I 9[[° L¤I h- ¤ wL {	
Y9Ð9¤[! /Y¤# ¥/[Lt{[h¤¤# ¥[I w¤. ! w¤# ゐ /t!	わゐ ゔゑろゐ	9 :[Y/Z[Lt	D/	t[w£l		a	w																			{! [9! . [9		わゐ ゔゑゐゑ	bh ¤! ! L[! . [9
Y9Ð! ¤[! /Y¤# ¥/[Lt{[h¤¤# ゐ /t!	わゐ ゔゑろゑ	! :[Y/Z[Lt	D/	t[w		a	w																			{! [9! . [9		わゐ ゔゑゐゑ	bh ¤! ! L[! . [9
Y9Ð! ¤[! /Y¤# ¥/[Lt{[h¤¤# ¥t!	わゐ ゔゑろゑ	! :[Y/Z[Lt	D/	t[w	/t!	a	w		ゟ																	{! [9! . [9		わゐ ゔゑゐゑ	bh ¤! ! L[! . [9
Y9Ð! ¤[! /Y¤# ¥/[Lt{[h¤¤# ¥t!	わゐ ゔゑゐゐ	! :[Y/Z[Lt	D/	t[w	/t!	a	w																			{! [9! . [9		わゐ ゔゑゐゑ	bh ¤! ! L[! . [9
Y9Ð! ¤[! /Y¤# ¥/[Lt{[h¤¤# ゐ /t!	わゐ ゔゑゐゑ	! :[Y/Z[Lt	D/	t[w		a	w		ゟ					ん				ゔろ			ゔゐ					{! [9! . [9		わゐ ゔゑゐゑ	bh ¤! ! L[! . [9
Y9ÐOf[DI ¤ Dw! Ð# ¥/[Lt{[h¤¤# ¥[I w¤. ! w¤# ゐ /t!	わゐ ゔゑゐゑ	C[D/Z[Lt	D/	t[w£l		a	w		ゟ	ゟ			を	ん							ゔゐ	ゔゐ	ゔゑ			{! [9! . [9		わゐ ゔゑゐゑ	bh ¤! ! L[! . [9
Y9ÐOf[DI ¤ Dw! Ð# ¥/[Lt{[h¤¤# ¥[I w¤. ! w¤# ゐ /t!	わゐ ゔゑゐゐ	C[D/Z[Lt	D/	t[w£l		a	w						を													{! [9! . [9		わゐ ゔゑゐゑ	bh ¤! ! L[! . [9
Y9ÐOf[DI ¤ Dw! Ð# ¥/[Lt{[h¤¤# ¥[I w¤. ! w¤# ゐ /t!	わゐ ゔゑゐゑ	C[D/Z[Lt	D/	t[w£l		a	w		ゟ	ゟ			を								ゔゐ					{! [9! . [9		わゐ ゔゑゐゑ	bh ¤! ! L[! . [9
Y9ÐOf[DI ¤ Dw! Ð# ¥/[Lt{[h¤¤# ¥[I w¤. ! w¤# ゐ /t!	わゐ ゔゑゐゑ	C[D/Z[Lt	D/	t[w£l		a	w						を								ゔゐ					{! [9! . [9		わゐ ゔゑゐゑ	bh ¤! ! L[! . [9
Y9ÐOf[DI ¤ Dw! Ð# ¥/[Lt{[h¤¤# ¥[I w¤. ! w¤# ゐ /t!	わゐ ゔゑゐゑ	C[D/Z[Lt	D/	t[w£l		a	w		ゟ				を					ゔを		ゔゐ						{! [9! . [9		わゐ ゔゑゐゑ	bh ¤! ! L[! . [9
Y9ÐOf[DI ¤ Dw! Ð# ¥/[Lt{[h¤¤# ¥[I w¤. ! w¤# ゐ /t!	わゐ ゔゑゐゑ	C[D/Z[Lt	D/	t[w£l		a	w						を					ゔを		ゔゐ						{! [9! . [9		わゐ ゔゑゐゑ	bh ¤! ! L[! . [9
Y9ÐOf[DI ¤ Dw! Ð# ¥/[Lt{[h¤¤# ¥[I w¤. ! w¤# ゐ /t!	わゐ ゔゑゐゑ	C[D/Z[Lt	D/	t[w£l		a	w		ゟ	ゟ			を													{! [9! . [9		わゐ ゔゑゐゑ	bh ¤! ! L[! . [9
Y9ÐOf[DI ¤ Dw! Ð# ¥/[Lt{[h¤¤# ¥[I w¤. ! w¤# ゐ /t!	わゐ ゔゑゐゑ	C[D/Z[Lt	D/	t[w£l		a	w																			{! [9! . [9		わゐ ゔゑゐゑ	bh ¤! ! L[! . [9
Y9ÐOf[DI ¤ Dw! Ð# ¥/[Lt{[h¤¤# ¥[I w¤. ! w¤# ゐ /t!	わゐ ゔゑゐゑ	C[D/Z[Lt	D/	t[w£l		a	w		ゟ	ゟ	ゔ	ゑ	を													{! [9! . [9		わゐ ゔゑゐゑ	bh ¤! ! L[! . [9
Y9Ð! ¤[! /Y¤# ¥/[Lt{[h¤¤# ¥[I w¤. ! w¤# ゐ /t!	わゐ ゔゑゐを	! :[Y/Z[Lt	D/	t[w		a	w		ゟ	ゟ	ゔ							ゔろ			ゔゐ					{! [9! . [9		わゐ ゔゑゐゑ	bh ¤! ! L[! . [9
Y9Ð9¤[! /Y¤# ¥/[Lt{[h¤¤# ¥[I w¤. ! w¤# ゐ /t!	わゐ ゔゑゐん	9 :[Y/Z[Lt	D/	t[w£l		a	w		ゟ													ゔゑ				{! [9! . [9		わゐ ゔゑゐゑ	bh ¤! ! L[! . [9
Y9Ð9¤[! /Y¤# ¥/[Lt{[h¤¤# ¥[I w¤. ! w¤# ゐ /t!	わゐ ゔゑゐゐ	9 :[Y/Z[Lt	D/	t[w£l		a	w										ゔれ	ゔろ			ゔゐ					{! [9! . [9		わゐ ゔゑゐゑ	bh ¤! ! L[! . [9
Y9Ð9¤[! /Y¤# ¥/[Lt{[h¤¤# ¥[I w¤. ! w¤# ゐ /t!	わゐ ゔゑゐゑ	9 :[Y/Z[Lt	D/	t[w£l		a	w						を	ん			ゔれ	ゔろ			ゔゐ					{! [9! . [9		わゐ ゔゑゐゑ	bh ¤! ! L[! . [9
Y9Ð9¤[! /Y¤# ¥/[Lt{[h¤¤# ¥[I w¤. ! w¤# ゐ /t!	わゐ ゔゑゐゑ	9 :[Y/Z[Lt	D/	t[w£l		a	w															ゔゐ	ゔゑ			{! [9! . [9		わゐ ゔゑゐゑ	bh ¤! ! L[! . [9
Y9Ð9¤[! /Y¤# ¥/[Lt{[h¤¤# ¥[I w¤. ! w¤# ゐ /t!	わゐ ゔゑゐを	9 :[Y/Z[Lt	D/	t[w£l		a	w															ゔゐ				{! [9! . [9		わゐ ゔゑゐゑ	bh ¤! ! L[! . [9
Y9Ð! ¤[! /Y¤# ¥/[Lt{[h¤¤# ¥[I w¤. ! w¤# ゐ /t!	わゐ ゔゑゐ゛	! :[Y/Z[Lt	D/	t[w		a	w						を	ん												{! [9! . [9		わゐ ゔゑゐゑ	bh ¤! ! L[! . [9
Y9Ð9¤[! /Y¤# ¥/[Lt{[h¤¤# ¥[I w¤. ! w¤# ゐ /t!	わゐ ゔゑゐ゜	9 :[Y/Z[Lt	D/	t[w£l		a	w		ゟ	ゟ																{! [9! . [9		わゐ ゔゑゐゑ	bh ¤! ! L[! . [9
Y9Ð! ¤[! /Y¤# ¥/[Lt{[h¤¤# ¥[I w¤. ! w¤# ゐ /t!	わゐ ゔゑゐ゜゛	9 :[Y/Z[Lt	D/	t[w£l		a	w																			{! [9! . [9		わゐ ゔゑゐゑ	bh ¤! ! L[! . [9
Y9Ð! ¤[! /Y¤# ¥/[Lt{[h¤¤# ¥[I w¤. ! w¤# ゐ /t!	わゐ ゔゑゐ゜゜	9 :[Y/Z[Lt	D/	t[w£l		a	w																			{! [9! . [9		わゐ ゔゑゐゑ	bh ¤! ! L[! . [9
Y9Ð! ¤[! /Y¤# ¥/[Lt{[h¤¤# ¥[I w¤. ! w¤# ゐ /t!	わゐ ゔゑゐ゜	C[D/Z[Lt	D/	t[w		a	w						を													{! [9! . [9		わゐ ゔゑゐゑ	bh ¤! ! L[! . [9
Y9Ð! ¤[! /Y¤# ¥/[Lt{[h¤¤# ¥[I w¤. ! w¤# ゐ /t!	わゐ ゔゑゐ゜゛	I Ð° /Z[Lt	D/	t[w£l		a	w																			{! [9! . [9		わゐ ゔゑゐゑ	bh ¤! ! L[! . [9
Y9Ð! ¤[! /Y¤# ¥/[Lt{[h¤¤# ¥[I w¤. ! w¤# ゐ /t!	わゐ ゔゑゐ゜゜	I Ð° /Z[Lt	D/	t[w£l		a	w																			{! [9! . [9		わゐ ゔゑゐゑ	bh ¤! ! L[! . [9
Y9Ð! ¤[! /Y¤# ¥/[Lt{[h¤¤# ¥[I w¤. ! w¤# ゐ /t!	わゐ ゔゑゐれ	I Ð° /Z[Lt	D/	t[w£l		a	w						を													{! [9! . [9		わゐ ゔゑゐゑ	bh ¤! ! L[! . [9
Y9Ð! ¤[! /Y¤# ¥/[Lt{[h¤¤# ¥[I w¤. ! w¤# ゐ /t!	わゐ ゔゑゐれ	! :[Y/Z[Lt	D/	t[w		a	w		ゟ	ゟ								ゔろ	ゔゐ		ゔゐ					{! [9! . [9		わゐ ゔゑゐゑ	bh ¤! ! L[! . [9
Y9Ð! ¤[! /Y¤# ¥/[Lt{[h¤¤# ¥[I w¤. ! w¤# ゐ /t!	わゐ ゔゑゐ	! :[Y/Z[Lt	D/	t[w		a	w		ゟ					ん				ゔろ	ゔゐ							{! [9! . [9		わゐ ゔゑゐゑ	bh ¤! ! L[! . [9
Y9Ð! ¤[! /Y¤# ¥/[Lt{[h¤¤# ¥[I w¤. ! w¤# ゐ /t!	わゐ ゔゑゐ	! :[Y/Z[Lt	D/	t[w		a	w		ゟ									ゔろ								{! [9! . [9		わゐ ゔゑゐゑ	bh ¤! ! L[! . [9
Y9Ð! ¤[! /Y¤# ¥/[Lt{[h¤¤# ¥[I w¤. ! w¤# ゐ /t!	わゐ ゔゑゐ	! :[Y/Z[Lt	D/	t[w		a	w		ゟ	ゟ							ゔれ	ゔろ			ゔゐ	ゔゑ				{! [9! . [9		わゐ ゔゑゐゑ	bh ¤! ! L[! . [9
Y9Ð! ¤[! /Y¤# ¥/[Lt{[h¤¤# ¥[I w¤. ! w¤# ゐ /t!	わゐ ゔゑゐ	! :[Y/Z[Lt	D/	t[w		a	w			ゟ																{! [9! . [9		わゐ ゔゑゐゑ	bh ¤! ! L[! . [9
Y9Ð! ¤[! /Y¤# ¥/[Lt{[h¤¤# ¥[I w¤. ! w¤# ゐ /t!	わゐ ゔゑゐ	! :[Y/Z[Lt	D/	t[w		a	w		ゟ					ん							ゔゐ	ゔゑ	ゔを			{! [9! . [9		わゐ ゔゑゐゑ	bh ¤! ! L[! . [9
Y9Ð! ¤[! /Y¤# ¥/[Lt{[h¤¤# ¥[I w¤. ! w¤# ゐ /t!	わゐ ゔゑゐ	! :[Y/Z[Lt	D/	t[w		a	w																			{! [9! . [9		わゐ ゔゑゐゑ	bh ¤! ! L[! . [9
Y9Ð! ¤[! /Y¤# ¥/[Lt{[h¤¤# ¥[I w¤. ! w¤# ゐ /t!	わゐ ゔゑゐ	! :[Y/Z[Lt	D/	t[w		a	w																			{! [9! . [9		わゐ ゔゑゐゑ	bh ¤! ! L[! . [9
Y9Ð! ¤[! /Y¤# ¥/[Lt{[h¤¤# ¥[I w¤. ! w¤# ゐ /t!	わゐ ゔゑゐ	! :[Y/Z[Lt	D/	t[w		a	w																			{! [9! . [9		わゐ ゔゑゐゑ	bh ¤! ! L[! . [9
Y9Ð! ¤[! /Y¤# ¥/[Lt{[h¤¤# ¥[I w¤. ! w¤# ゐ /t!	わゐ ゔゑゐ	! :[Y/Z[Lt	D/	t[w		a	w																			{! [9! . [9		わゐ ゔゑゐゑ	bh ¤! ! L[! . [9
Y9Ð! ¤[! /Y¤# ¥/[Lt{[h¤¤# ¥[I w¤. ! w¤# ゐ /t!	わゐ ゔゑゐ	! :[Y/Z[Lt	D/	t[w		a	w																			{! [9! . [9		わゐ ゔゑゐゑ	bh ¤! ! L[! . [9
Y9Ð! ¤[! /Y¤# ¥/[Lt{[h¤¤# ¥[I w¤. ! w¤# ゐ /t!	わゐ ゔゑゐ	! :[Y/Z[Lt	D/	t[w		a	w																			{! [9! . [9		わゐ ゔゑゐゑ	bh ¤! ! L[! . [9
Y9Ð! ¤[! /Y¤# ¥/[Lt{[h¤¤# ¥[I w¤. ! w¤# ゐ /t!	わゐ ゔゑゐ	! :[Y/Z[Lt	D/	t[w		a	w																			{! [9! . [9		わゐ ゔゑゐゑ	bh ¤! ! L[! . [9
Y9Ð! ¤[! /Y¤# ¥/[Lt{[h¤¤# ¥[I w¤. ! w¤# ゐ /t!	わゐ ゔゑゐ	! :[Y/Z[Lt	D/	t[w		a	w																			{! [9! . [9		わゐ ゔゑゐゑ	bh ¤! ! L[! . [9
Y9Ð! ¤[! /Y¤# ¥/[Lt{[h¤¤# ¥[I w¤. ! w¤# ゐ /t!	わゐ ゔゑゐ	! :[Y/Z[Lt	D/	t[w		a	w																			{! [9! . [9		わゐ ゔゑゐゑ	bh ¤! ! L[! . [9
Y9Ð! ¤[! /Y¤# ¥/[Lt{[h¤¤# ¥[I w¤. ! w¤# ゐ /t!	わゐ ゔゑゐ	! :[Y/Z[Lt	D/	t[w		a	w																			{! [9! . [9		わゐ ゔゑゐゑ	bh ¤! ! L[! . [9
Y9Ð! ¤[! /Y¤# ¥/[Lt{[h¤¤# ¥[I w¤. ! w¤# ゐ /t!	わゐ ゔゑゐ	! :[Y/Z[Lt	D/	t[w		a	w																			{! [9! . [9		わゐ ゔゑゐゑ	bh ¤! ! L[! . [9
Y9Ð! ¤[! /Y¤# ¥/[Lt{[h¤¤# ¥[I w¤. ! w¤# ゐ /t!	わゐ ゔゑゐ	! :[Y/Z[Lt	D/	t[w		a	w																			{! [9! . [9		わゐ ゔゑゐゑ	bh ¤! ! L[! . [9
Y9Ð! ¤[! /Y¤# ¥/[Lt{[h¤¤# ¥[I w¤. ! w¤# ゐ /t!	わゐ ゔゑゐ	! :[Y/Z[Lt	D/	t[w		a	w																			{! [9! . [9		わゐ ゔゑゐゑ	bh ¤! ! L[! . [9
Y9Ð9¤[! /Y¤# ¥/[Lt{[h¤¤# ¥[I w¤. ! w¤# ゐ /t!	わゐ ゔゑゐ	9 :[Y/Z[Lt	D/	t[w£l		a	w																			{! [9! . [9		わゐ ゔゑゐゑ	bh ¤! ! L[! . [9
Y9ÐOf[DI ¤ Dw! Ð# ¥/[Lt{[h¤¤# ¥[I w¤. ! w¤# ゐ /t!	わゐ ゔゑゐ	C[D/Z[Lt	D/	t[w£l		a	w																			{! [9! . [9		わゐ ゔゑゐゑ	bh ¤! ! L[! . [9
Y9Ð! ¤[! /Y¤# ¥/[Lt{[h¤¤# ¥[I w¤. ! w¤# ゐ /t!	わゐ ゔゑゐ	! :[Y/Z[Lt	D/	t[w		a	w																			{! [9! . [9		わゐ ゔゑゐゑ	bh ¤! ! L[! . [9
Y9Ð! ¤[! /Y¤# ¥/[Lt{[h¤¤# ¥[I w¤. ! w¤# ゐ /t!	わゐ ゔゑゐ゛	! :[Y/Z[Lt	D/	t[w		a	w		ゟ																	{! [9! . [9		わゐ ゔゑゐゑ	bh ¤! ! L[! . [9
Y9Ð! ¤[! /Y¤# ¥/[Lt{[h¤¤# ¥t!	わゐ ゔゑゐ゜゛	! :[Y/Z[Lt	D/	t[w	/t!	a	w						を	ん							ゔゐ					{! [9! . [9		わゐ ゔゑゐゑ	bh ¤! ! L[! . [9
Y9Ð! ¤[! /Y¤# ¥/[Lt{[h¤¤# ¥[I w¤. ! w¤# ゐ /t!	わゐ ゔゑゐ゛	! :[Y/Z[Lt	D/	t[w		a	w		ゟ	ゟ	ゔ			ん								ゔゐ				{! [9! . [9		わゐ ゔゑゐゑ	bh ¤! ! L[! . [9
Y9Ð! ¤[! /Y¤# ¥/[Lt{[h¤¤# ¥[I w¤. ! w¤# ゐ /t!	わゐ ゔゑゐ	! :[Y/Z[Lt	D/	t[w		a	w		ゟ	ゟ	ゔ		を	ん			ゔれ	ゔろ	ゔゐ	ゔゐ	ゔゐ	ゔゑ	ゔを			{! [9! . [9		わゐ ゔゑゐゑ	bh ¤! ! L[! . [9
Y9Ð! ¤[! /Y¤# ¥/[Lt{[h¤¤# ¥[I w¤. ! w¤# ゐ /t!	わゐ ゔゑゐ	! :[Y/Z[Lt	D/	t[w		a	w			ゟ	ゔ			ん			ゔれ	ゔろ	ゔゐ	ゔゐ	ゔゐ	ゔゑ	ゔを			{! [9! . [9		わゐ ゔゑゐゑ	bh ¤! ! L[! . [9
Y9Ð! ¤[! /Y¤# ¥/[Lt{[h¤¤# ¥[I w¤. ! w¤# ゐ /t!	わゐ ゔゑゐ	! :[Y/Z[Lt	D/	t[w		a	w														ゔゐ	ゔゑ	ゔを			{! [9! . [9		わゐ ゔゑゐゑ	bh ¤! ! L[! . [9

! {{9a . [Ð59{/wLt¤Lhb	! {{9a . [Ðt! w¤ b- a . 9w	/ha thb9b¤						. [h/Y95 ¤9wa Lb! [{																{¤! ¤- {	/ha a 9b¤{	ht¤Lhb! [! ¤¤! ¤/I a 9b¤{ {h[5 {9t 9W ¤9[Ð	
		¤I 9tw9{9b/9hC! b! . . w9¹ L! ¤Lhb Lb5L/! ¤9{ ¤I 9tw9{9b/9hC¤I ! ¤ /ha thb9b¤♔						/! ¹ L¤Ð° L¤I ! b- a . 9wLb5L/! ¤9{ . [h/Y95 ¤9wa Lb! [th{L¤Lhb /! ¹ L¤Ð° L¤I h- ¤! b- a . 9wLb5L/! ¤9{ ht9b ¤9wa Lb! [th{L¤Lhb																			
		I h-{LbD Y9Ð♨h[hw	Dwha a 9¤ /! t	t[w	/t!	a ! ¤{9! [	wLb D {9! [	ろ	ゎ	わ	ゐ	ゑ	を	ん	ゔ	゛	3れ	35	3ゎ	3わ	3ゐ	3ゑ	3を			. ! /Y{I 9[[° L¤I wL {	. ! /Y{I 9[[° L¤I h- ¤ wL {
Y9Ð! ☞[! /Y☞ ♨[Lt{[h¤☞ ♨ /t!	ゎゐ ゔゑ[illegible]	! ⊡[Y☐[Lt	D/	t[w		a	w												3ｧ	3ｵ	3ð	3ｹ		{! [9! . [9		ゎゐ ゑれ3を3を	bh¤! ¹ ! L[! . [9
Y9Ð! ☞[! /Y☞ ♨[Lt{[h¤☞ ♨ /t!	ゎゐ ゔゑ[illegible]	! ⊡[Y☐[Lt	D/	t[w		a	w			ｷ	ð		ぇ				3ｫ	3ｴ	3ｧ	3ｵ		3ｹ		{! [9! . [9		ゎゐ ゑれ3を3を	bh¤! ¹ ! L[! . [9
Y9Ð! ☞[! /Y☞ ♨[Lt{[h¤☞ ♨ /t!	ゎゐ ゔゑ[illegible]	! ⊡[Y☐[Lt	D/	t[w		a	w			ｷ	ð		ぇ	ん			3ｫ	3ｴ	3ｧ	3ｵ		3ｹ		{! [9! . [9		ゎゐ ゑれ3を3を	bh¤! ¹ ! L[! . [9
Y9Ð! ☞[! /Y☞ ♨[Lt{[h¤☞ ♨ /t!	ゎゐ ゔゑ[illegible]	! ⊡[Y☐[Lt	D/	t[w		a	w										3ｫ	3ｴ			3ð			{! [9! . [9		ゎゐ ゑれ3を3を	bh¤! ¹ ! L[! . [9
Y9Ð! ☞[! /Y☞ ♨[Lt{[h¤☞ ♨ /t!	ゎゐ ゔゑ[illegible]	! ⊡[Y☐[Lt	D/	t[w		a	w						ぇ	ん			3ｫ	3ｴ	3ｧ	3ｵ	3ð	3ｹ		{! [9! . [9		ゎゐ ゑれ3を3を	bh¤! ¹ ! L[! . [9
Y9Ð! ☞[! /Y☞ ♨[Lt{[h¤☞ ♨ /t!	ゎゐ ゔゑ[illegible]	! ⊡[Y☐[Lt	D/	t[w		a	w		ｫ					ん				3ｴ	3ｧ	3ｵ				{! [9! . [9		ゎゐ ゑれ3を3を	bh¤! ¹ ! L[! . [9
Y9Ð! ☞[! /Y☞ ♨[Lt{[h¤☞ ♨ /t!	ゎゐ ゔゑ[illegible]	! ⊡[Y☐[Lt	D/	t[w		a	w						ぇ	ん					3ｧ	3ｵ	3ð	3ｹ		{! [9! . [9		ゎゐ ゑれ3を3を	bh¤! ¹ ! L[! . [9
Y9Ð! ☞[! /Y☞ ♨[Lt{[h¤☞ ♨ /t!	ゎゐ ゔゑ[illegible]	! ⊡[Y☐[Lt	D/	t[w		a	w		ｫ				ぇ	ん					3ｧ	3ｵ	3ð	3ｹ		{! [9! . [9		ゎゐ ゑれ3を3を	bh¤! ¹ ! L[! . [9
Y9Ð! ☞[! /Y☞ ♨[Lt{[h¤☞ ♨ /t!	ゎゐ ゔゑ[illegible]	! ⊡[Y☐[Lt	D/	t[w		a	w			ｷ	ð	ゑ		ん			3ｫ	3ｴ		3ｵ	3ð	3ｹ		{! [9! . [9		ゎゐ ゑれ3を3を	bh¤! ¹ ! L[! . [9
Y9Ð! ☞[! /Y☞ ♨[Lt{[h¤☞ ♨ /t!	ゎゐ ゔゑ[illegible]	! ⊡[Y☐[Lt	D/	t[w		a	w							ん			3ｫ	3ｴ	3ｧ		3ð			{! [9! . [9		ゎゐ ゑれ3を3を	bh¤! ¹ ! L[! . [9
Y9Ð. ☞[LÐI ¤ DwL Ð☞ ♨[Lt{[h¤☞ ♨ /t!	ゎゐ ゔゑ[illegible]	. ⊡D☐[Lt	D/	t[w		a	w																	{! [9! . [9		ゎゐ ゑれ3を3を	bh¤! ¹ ! L[! . [9
Y9Ð. ☞[LÐI ¤ DwL Ð☞ ♨[Lt{[h¤☞ ♨ /t!	ゎゐ ゔゑ[illegible]	. ⊡D☐[Lt	D/	t[w		a	w		ｫ	ｷ	ð	ゑ	ぇ	ん			3ｫ	3ｴ	3ｧ	3ｵ	3ð	3ｹ		{! [9! . [9		ゎゐ ゑれ3を3を	bh¤! ¹ ! L[! . [9
Y9Ð. ☞[LÐI ¤ DwL Ð☞ ♨[Lt{[h¤☞ ♨ /t!	ゎゐ ゔゑ[illegible]	. ⊡D☐[Lt	D/	t[w		a	w				ð													{! [9! . [9		ゎゐ ゑれ3を3を	bh¤! ¹ ! L[! . [9
Y9Ð. ☞[LÐI ¤ DwL Ð☞ ♨[Lt{[h¤☞ ♨ /t!	ゎゐ ゔゑ[illegible]	. ⊡D☐[Lt	D/	t[w		a	w				ð									3ｵ				{! [9! . [9		ゎゐ ゑれ3を3を	bh¤! ¹ ! L[! . [9
Y9Ð! ☞[! /Y☞ ♨[Lt{[h¤☞ ♨ /t!	ゎゐ ゔゑ[illegible]	! ⊡[Y☐[Lt	D/	t[w		a	w		ｫ			ゑ	ぇ						3ｧ	3ｵ	3ð	3ｹ		{! [9! . [9		ゎゐ ゑれ3を3を	bh¤! ¹ ! L[! . [9
Y9Ð! ☞[! /Y☞ ♨[Lt{[h¤☞ ♨ /t!	ゎゐ ゔゑ[illegible]	! ⊡[Y☐[Lt	D/	t[w		a	w		ｫ	ｷ	ð			ん			3ｫ	3ｴ	3ｧ	3ｵ	3ð	3ｹ		{! [9! . [9		ゎゐ ゑれ3を3を	bh¤! ¹ ! L[! . [9
Y9Ð! ☞[! /Y☞ ♨[Lt{[h¤☞ ♨ /t!	ゎゐ ゔゑ[illegible]	! ⊡[Y☐[Lt	D/	t[w		a	w		ｫ										3ｧ	3ｵ	3ð	3ｹ		{! [9! . [9		ゎゐ ゑれ3を3を	bh¤! ¹ ! L[! . [9
Y9Ð! ☞[! /Y☞ ♨[Lt{[h¤☞ ♨ /t!	ゎゐ ゔゑ[illegible]	! ⊡[Y☐[Lt	D/	t[w		a	w			ｷ	ð	ゑ		ん			3ｫ	3ｴ	3ｧ	3ｵ	3ð	3ｹ		{! [9! . [9		ゎゐ ゑれ3を3を	bh¤! ¹ ! L[! . [9
Y9Ð! ☞[! /Y☞ ♨[Lt{[h¤☞ ♨ /t!	ゎゐ ゔゑ[illegible]	! ⊡[Y☐[Lt	D/	t[w		a	w				ð										3ð	3ｹ		{! [9! . [9		ゎゐ ゑれ3を3を	bh¤! ¹ ! L[! . [9
Y9Ð! ☞[! /Y☞ ♨[Lt{[h¤☞ ♨ /t!	ゎゐ ゔゑ[illegible]	! ⊡[Y☐[Lt	D/	t[w		a	w		ｫ	ｷ		ゑ	ぇ				3ｫ	3ｴ	3ｧ	3ｵ	3ð	3ｹ		{! [9! . [9		ゎゐ ゑれ3を3を	bh¤! ¹ ! L[! . [9
Y9Ð! ☞[! /Y☞ ♨[Lt{[h¤☞ ♨ /t!	ゎゐ ゔゑ[illegible]	! ⊡[Y☐[Lt	D/	t[w		a	w				ð						3ｫ				3ð	3ｹ		{! [9! . [9		ゎゐ ゑれ3を3を	bh¤! ¹ ! L[! . [9
Y9ÐI ☞Ð9[[h° ☞ ♨[Lt{[h¤☞ ♨t!	ゎゐ ゔゑ[illegible]	I ⊡° ☐[Lt	D/	t[w	/t!	a	w		ｫ	ｷ												3ｹ		{! [9! . [9		ゎゐ ゑれ3を3を	bh¤! ¹ ! L[! . [9
Y9Ð! ☞[! /Y☞ ♨[Lt{[h¤☞ ♨ /t!	ゎゐ ゔゑ[illegible]	! ⊡[Y☐[Lt	D/	t[w		a	w		ｫ	ｷ		ゑ	ぇ					3ｴ			3ð	3ｹ		{! [9! . [9		ゎゐ ゑれ3を3を	bh¤! ¹ ! L[! . [9
Y9ÐI ☞Ð9[[h° ☞ ♨[Lt{[h¤☞ ♨I w¤. ! w☞ ♨t!	ゎゐ ゔゑ[illegible]	I ⊡° ☐[Lt	D/	t[w{⊡	/t!	a	w		ｫ													3ｹ		{! [9! . [9		ゎゐ ゑれ3を3を	bh¤! ¹ ! L[! . [9
Y9Ð! ☞[! /Y☞ ♨[Lt{[h¤☞ ♨ /t!	ゎゐ ゔゑ[illegible]	! ⊡[Y☐[Lt	D/	t[w		a	w		ｫ				ぇ	ん			3ｫ	3ｴ	3ｧ	3ｵ	3ð	3ｹ		{! [9! . [9		ゎゐ ゑれ3を3を	bh¤! ¹ ! L[! . [9
Y9Ð! ☞Ð9[[h° ☞ ♨[Lt{[h¤☞ ♨ /t!	ゎゐ ゔゑ[illegible]	! ⊡° ☐[Lt	D/	t[w		a	w		ｫ													3ｹ		{! [9! . [9		ゎゐ ゑれ3を3を	bh¤! ¹ ! L[! . [9
Y9ÐC☞[LÐI ¤ DwL Ð☞ ♨[Lt{[h¤☞ ♨I w¤. ! w☞ ♨ /t!	ゎゐ ゔゑ[illegible]	C⊡D☐[Lt	D/	t[w{⊡		a	w				ð	ゑ	ぇ	ん			3ｫ	3ｴ	3ｧ	3ｵ	3ð	3ｹ		{! [9! . [9		ゎゐ ゑれ3を3を	bh¤! ¹ ! L[! . [9
Y9ÐC☞[LÐI ¤ DwL Ð☞ ♨[Lt{[h¤☞ ♨I w¤. ! w☞ ♨ /t!	ゎゐ ゔゑ[illegible]	C⊡D☐[Lt	D/	t[w{⊡		a	w		ｫ	ｷ			ぇ	ん							3ð	3ｹ		{! [9! . [9		ゎゐ ゑれ3を3を	bh¤! ¹ ! L[! . [9
Y9ÐC☞[LÐI ¤ DwL Ð☞ ♨[Lt{[h¤☞ ♨I w¤. ! w☞ ♨ /t!	ゎゐ ゔゑ[illegible]	C⊡D☐[Lt	D/	t[w{⊡		a	w						ぇ	ん							3ð	3ｹ		{! [9! . [9		ゎゐ ゑれ3を3を	bh¤! ¹ ! L[! . [9
Y9Ð! ☞[! /Y☞ ♨[Lt{[h¤☞ ♨ /t!	ゎゐ ゔゑ[illegible]	! ⊡[Y☐[Lt	D/	t[w		a	w		ｫ	ｷ		ゑ	ぇ					3ｴ				3ｹ		{! [9! . [9		ゎゐ ゑれ3を3を	bh¤! ¹ ! L[! . [9
Y9Ð! ☞[! /Y☞ ♨[Lt{[h¤☞ ♨ /t!	ゎゐ ゔゑ[illegible]	! ⊡[Y☐[Lt	D/	t[w		a	w		ｫ	ｷ	ð	ゑ	ぇ	ん			3ｫ	3ｴ	3ｧ	3ｵ	3ð	3ｹ		{! [9! . [9		ゎゐ ゑれ3を3を	bh¤! ¹ ! L[! . [9
Y9Ð. ☞[LÐI ¤ DwL Ð☞ ♨[Lt{[h¤☞ ♨ /t!	ゎゐ ゔゑ[illegible]	. ⊡D☐[Lt	D/	t[w		a	w				ð		ぇ							3ｵ				{! [9! . [9		ゎゐ ゑれ3を3を	bh¤! ¹ ! L[! . [9
Y9Ð9☞[! /Y☞ ♨[Lt{[h¤☞ ♨I w¤. ! w☞ ♨ /t!	ゎゐ ゔゑ[illegible]	9⊡[Y☐[Lt	D/	t[w{⊡		a	w																	{! [9! . [9		ゎゐ ゑれ3を3を	bh¤! ¹ ! L[! . [9
Y9ÐC☞[LÐI ¤ DwL Ð☞ ♨[Lt{[h¤☞ ♨I w¤. ! w☞ ♨ /t!	ゎゐ ゔゑ[illegible]	C⊡D☐[Lt	D/	t[w{⊡		a	w		ｫ	ｷ			ぇ	ん						3ｵ	3ð	3ｹ		{! [9! . [9		ゎゐ ゑれ3を3を	bh¤! ¹ ! L[! . [9
Y9ÐC☞[LÐI ¤ DwL Ð☞ ♨[Lt{[h¤☞ ♨I w¤. ! w☞ ♨ /t!	ゎゐ ゔゑ[illegible]	C⊡D☐[Lt	D/	t[w{⊡		a	w						ぇ											{! [9! . [9		ゎゐ ゑれ3を3を	bh¤! ¹ ! L[! . [9
Y9ÐC☞[LÐI ¤ DwL Ð☞ ♨[Lt{[h¤☞ ♨I w¤. ! w☞ ♨ /t!	ゎゐ ゔゑ[illegible]	C⊡D☐[Lt	D/	t[w{⊡		a	w		ｫ	ｷ			ぇ							3ｵ				{! [9! . [9		ゎゐ ゑれ3を3を	bh¤! ¹ ! L[! . [9
Y9ÐC☞[LÐI ¤ DwL Ð☞ ♨[Lt{[h¤☞ ♨I w¤. ! w☞ ♨ /t!	ゎゐ ゔゑ[illegible]	C⊡D☐[Lt	D/	t[w{⊡		a	w						ぇ						3ｧ					{! [9! . [9		ゎゐ ゑれ3を3を	bh¤! ¹ ! L[! . [9
Y9ÐC☞[LÐI ¤ DwL Ð☞ ♨[Lt{[h¤☞ ♨I w¤. ! w☞ ♨ /t!	ゎゐ ゔゑ[illegible]	C⊡D☐[Lt	D/	t[w{⊡		a	w		ｫ				ぇ				3ｫ	3ｴ	3ｧ					{! [9! . [9		ゎゐ ゑれ3を3を	bh¤! ¹ ! L[! . [9
Y9ÐC☞[LÐI ¤ DwL Ð☞ ♨[Lt{[h¤☞ ♨I w¤. ! w☞ ♨ /t!	ゎゐ ゔゑ[illegible]	C⊡D☐[Lt	D/	t[w{⊡		a	w						ぇ						3ｧ					{! [9! . [9		ゎゐ ゑれ3を3を	bh¤! ¹ ! L[! . [9
Y9ÐC☞[LÐI ¤ DwL Ð☞ ♨[Lt{[h¤☞ ♨I w¤. ! w☞ ♨ /t!	ゎゐ ゔゑ[illegible]	C⊡D☐[Lt	D/	t[w{⊡		a	w						ぇ					3ｴ	3ｧ					{! [9! . [9		ゎゐ ゑれ3を3を	bh¤! ¹ ! L[! . [9
Y9ÐC☞[LÐI ¤ DwL Ð☞ ♨[Lt{[h¤☞ ♨I w¤. ! w☞ ♨ /t!	ゎゐ ゔゑ[illegible]	C⊡D☐[Lt	D/	t[w{⊡		a	w		ｫ	ｷ			ぇ				3ｫ							{! [9! . [9		ゎゐ ゑれ3を3を	bh¤! ¹ ! L[! . [9
Y9ÐC☞[LÐI ¤ DwL Ð☞ ♨[Lt{[h¤☞ ♨I w¤. ! w☞ ♨ /t!	ゎゐ ゔゑ[illegible]	C⊡D☐[Lt	D/	t[w{⊡		a	w						ぇ											{! [9! . [9		ゎゐ ゑれ3を3を	bh¤! ¹ ! L[! . [9
Y9ÐC☞[LÐI ¤ DwL Ð☞ ♨[Lt{[h¤☞ ♨I w¤. ! w☞ ♨ /t!	ゎゐ ゔゑ[illegible]	C⊡D☐[Lt	D/	t[w{⊡		a	w		ｫ	ｷ	ð	ゑ	ぇ				3ｫ							{! [9! . [9		ゎゐ ゑれ3を3を	bh¤! ¹ ! L[! . [9
Y9Ð! ☞[! /Y☞ ♨[Lt{[h¤☞ ♨ /t!	ゎゐ ゔゑ[illegible]	! ⊡[Y☐[Lt	D/	t[w		a	w			ｷ	ð		ぇ	ん						3ｵ	3ð	3ｹ		{! [9! . [9		ゎゐ ゑれ3を3を	bh¤! ¹ ! L[! . [9
Y9Ð! ☞[! /Y☞ ♨[Lt{[h¤☞ ♨ /t!	ゎゐ ゔゑ[illegible]	! ⊡[Y☐[Lt	D/	t[w		a	w			ｷ		ゑ	ぇ	ん			3ｫ	3ｴ	3ｧ	3ｵ	3ð	3ｹ		{! [9! . [9		ゎゐ ゑれ3を3を	bh¤! ¹ ! L[! . [9
Y9Ð! ☞[! /Y☞ ♨[Lt{[h¤☞ ♨ /t!	ゎゐ ゔゑ[illegible]	! ⊡[Y☐[Lt	D/	t[w		a	w		ｫ	ｷ		ゑ	ぇ	ん			3ｫ	3ｴ	3ｧ	3ｵ	3ð	3ｹ		{! [9! . [9		ゎゐ ゑれ3を3を	bh¤! ¹ ! L[! . [9
Y9ÐC☞[LÐI ¤ DwL Ð☞ ♨[Lt{[h¤☞ ♨I w¤. ! w☞ ♨ /t!	ゎゐ ゔゑ[illegible]	C⊡D☐[Lt	D/	t[w{⊡		a	w		ｫ	ｷ	ð	ゑ	ぇ	ん			3ｫ	3ｴ	3ｧ	3ｵ	3ð	3ｹ		{! [9! . [9		ゎゐ ゑれ3を3を	bh¤! ¹ ! L[! . [9
Y9Ð! ☞[! /Y☞ ♨[Lt{[h¤☞ ♨ /t!	ゎゐ ゔゑ[illegible]	! ⊡[Y☐[Lt	D/	t[w		a	w			ｷ	ð			ん			3ｫ	3ｴ	3ｧ	3ｵ	3ð	3ｹ		{! [9! . [9		ゎゐ ゑれ3を3を	bh¤! ¹ ! L[! . [9
Y9Ð! ☞[! /Y☞ ♨[Lt{[h¤☞ ♨ /t!	ゎゐ ゔゑ[illegible]	! ⊡[Y☐[Lt	D/	t[w		a	w		ｫ	ｷ	ð	ゑ	ぇ	ん				3ｴ			3ð	3ｹ		{! [9! . [9		ゎゐ ゑれ3を3を	bh¤! ¹ ! L[! . [9
Y9Ð! ☞[! /Y☞ ♨[Lt{[h¤☞ ♨ /t!	ゎゐ ゔゑ[illegible]	! ⊡[Y☐[Lt	D/	t[w		a	w		ｫ	ｷ		ゑ	ぇ	ん				3ｴ			3ð	3ｹ		{! [9! . [9		ゎゐ ゑれ3を3を	bh¤! ¹ ! L[! . [9
Y9Ð! ☞[! /Y☞ ♨[Lt{[h¤☞ ♨ /t!	ゎゐ ゔゑ[illegible]	! ⊡[Y☐[Lt	D/	t[w		a	w			ｷ		ゑ	ぇ	ん						3ｵ	3ð	3ｹ		{! [9! . [9		ゎゐ ゑれ3を3を	bh¤! ¹ ! L[! . [9
Y9Ð! ☞[! /Y☞ ♨[Lt{[h¤☞ ♨ /t!	ゎゐ ゔゑ[illegible]	! ⊡[Y☐[Lt	D/	t[w		a	w										3ｫ	3ｴ	3ｧ	3ｵ	3ð	3ｹ		{! [9! . [9		ゎゐ ゑれ3を3を	bh¤! ¹ ! L[! . [9
Y9Ð! ☞[! /Y☞ ♨[Lt{[h¤☞ ♨ /t!	ゎゐ ゔゑ[illegible]	! ⊡[Y☐[Lt	D/	t[w		a	w		ｫ		ð	ゑ					3ｫ	3ｴ	3ｧ	3ｵ	3ð	3ｹ		{! [9! . [9		ゎゐ ゑれ3を3を	bh¤! ¹ ! L[! . [9
Y9Ð! ☞[! /Y☞ ♨[Lt{[h¤☞ ♨ /t!	ゎゐ ゔゑ[illegible]	! ⊡[Y☐[Lt	D/	t[w		a	w		ｫ	ｷ	ð	ゑ	ぇ	ん				3ｴ	3ｧ	3ｵ	3ð	3ｹ		{! [9! . [9		ゎゐ ゑれ3を3を	bh¤! ¹ ! L[! . [9
Y9Ð! ☞[! /Y☞ ♨[Lt{[h¤☞ ♨ /t!	ゎゐ ゔゑ[illegible]	! ⊡[Y☐[Lt	D/	t[w		a	w		ｫ	ｷ		ゑ	ぇ	ん				3ｴ	3ｧ	3ｵ	3ð	3ｹ		{! [9! . [9		ゎゐ ゑれ3を3を	bh¤! ¹ ! L[! . [9
Y9Ð! ☞[! /Y☞ ♨[Lt{[h¤☞ ♨ /t!	ゎゐ ゔゑ[illegible]	! ⊡[Y☐[Lt	D/	t[w		a	w		ｫ										3ｧ	3ｵ	3ð			{! [9! . [9		ゎゐ ゑれ3を3を	bh¤! ¹ ! L[! . [9
Y9Ð! ☞[! /Y☞ ♨[Lt{[h¤☞ ♨ /t!	ゎゐ ゔゑ[illegible]	! ⊡[Y☐[Lt	D/	t[w		a	w			ｷ		ゑ	ぇ	ん			3ｫ	3ｴ				3ｹ		{! [9! . [9		ゎゐ ゑれ3を3を	bh¤! ¹ ! L[! . [9
Y9Ð! ☞[! /Y☞ ♨[Lt{[h¤☞ ♨ /t!	ゎゐ ゔゑ[illegible]	! ⊡[Y☐[Lt	D/	t[w		a	w			ｷ		ゑ	ぇ	ん								3ｹ		{! [9! . [9		ゎゐ ゑれ3を3を	bh¤! ¹ ! L[! . [9
Y9Ð! ☞[! /Y☞ ♨[Lt{[h¤☞ ♨ /t!	ゎゐ ゔゑ[illegible]	! ⊡[Y☐[Lt	D/	t[w		a	w			ｷ				ん			3ｫ	3ｴ						{! [9! . [9		ゎゐ ゑれ3を3を	bh¤! ¹ ! L[! . [9
Y9Ð! ☞[! /Y☞ ♨[Lt{[h¤☞ ♨ /t!	ゎゐ ゔゑ[illegible]	! ⊡[Y☐[Lt	D/	t[w		a	w					ゑ												{! [9! . [9		ゎゐ ゑれ3を3を	bh¤! ¹ ! L[! . [9
Y9Ð! ☞[! /Y☞ ♨[Lt{[h¤☞ ♨ /t!	ゎゐ ゔゑ[illegible]	! ⊡[Y☐[Lt	D/	t[w		a	w		ｫ					ん			3ｫ							{! [9! . [9		ゎゐ ゑれ3を3を	bh¤! ¹ ! L[! . [9
Y9Ð! ☞[! /Y☞ ♨[Lt{[h¤☞ ♨ /t!	ゎゐ ゔゑ[illegible]	! ⊡[Y☐[Lt	D/	t[w		a	w		ｫ	ｷ	ð	ゑ	ぇ	ん			3ｫ	3ｴ	3ｧ	3ｵ		3ｹ		{! [9! . [9		ゎゐ ゑれ3を3を	bh¤! ¹ ! L[! . [9
Y9Ð! ☞[! /Y☞ ♨[Lt{[h¤☞ ♨ /t!	ゎゐ ゔゑ[illegible]	! ⊡[Y☐[Lt	D/	t[w		a	w		ｫ	ｷ		ゑ	ぇ	ん			3ｫ	3ｴ	3ｧ	3ｵ	3ð	3ｹ		{! [9! . [9		ゎゐ ゑれ3を3を	bh¤! ¹ ! L[! . [9
Y9Ð! ☞[! /Y☞ ♨[Lt{[h¤☞ ♨ /t!	ゎゐ ゔゑ[illegible]	! ⊡[Y☐[Lt	D/	t[w		a	w		ｫ		ð	ゑ	ぇ	ん			3ｫ	3ｴ	3ｧ		3ð	3ｹ		{! [9! . [9		ゎゐ ゑれ3を3を	bh¤! ¹ ! L[! . [9
Y9Ð! ☞[! /Y☞ ♨[Lt{[h¤☞ ♨ /t!	ゎゐ ゔゑ[illegible]	! ⊡[Y☐[Lt	D/	t[w		a	w		ｫ	ｷ		ゑ	ぇ	ん				3ｴ				3ｹ		{! [9! . [9		ゎゐ ゑれ3を3を	bh¤! ¹ ! L[! . [9
Y9Ð! ☞[! /Y☞ ♨[Lt{[h¤☞ ♨ /t!	ゎゐ ゔゑ[illegible]	! ⊡[Y☐[Lt	D/	t[w		a	w			ｷ		ゑ	ぇ	ん						3ｵ	3ð	3ｹ		{! [9! . [9		ゎゐ ゑれ3を3を	bh¤! ¹ ! L[! . [9
Y9Ð! ☞[! /Y☞ ♨[Lt{[h¤☞ ♨ /t!	ゎゐ ゔゑ[illegible]	! ⊡[Y☐[Lt	D/	t[w		a	w			ｷ	ð			ん			3ｫ	3ｴ						{! [9! . [9		ゎゐ ゑれ3を3を	bh¤! ¹ ! L[! . [9
Y9Ð! ☞[! /Y☞ ♨[Lt{[h¤☞ ♨ /t!	ゎゐ ゔゑ[illegible]	! ⊡[Y☐[Lt	D/	t[w		a	w										3ｫ					3ｹ		{! [9! . [9		ゎゐ ゑれ3を3を	bh¤! ¹ ! L[! . [9
Y9Ð! ☞[! /Y☞ ♨[Lt{[h¤☞ ♨ /t!	ゎゐ ゔゑ[illegible]	! ⊡[Y☐[Lt	D/	t[w		a	w		ｫ	ｷ		ゑ	ぇ	ん				3ｴ	3ｧ	3ｵ		3ｹ		{! [9! . [9		ゎゐ ゑれ3を3を	bh¤! ¹ ! L[! . [9
Y9Ð! ☞[! /Y☞ ♨[Lt{[h¤☞ ♨ /t!	ゎゐ ゔゑ[illegible]	! ⊡[Y☐[Lt	D/	t[w		a	w		ｫ	ｷ		ゑ	ぇ					3ｴ	3ｧ	3ｵ		3ｹ		{! [9! . [9		ゎゐ ゑれ3を3を	bh¤! ¹ ! L[! . [9
Y9Ð! ☞[! /Y☞ ♨[Lt{[h¤☞ ♨ /t!	ゎゐ ゔゑ[illegible]	! ⊡[Y☐[Lt	D/	t[w		a	w		ｫ	ｷ		ゑ	ぇ					3ｴ	3ｧ	3ｵ	3ð	3ｹ		{! [9! . [9		ゎゐ ゑれ3を3を	bh¤! ¹ ! L[! . [9
Y9Ð! ☞[! /Y☞ ♨[Lt{[h¤☞ ♨ /t!	ゎゐ ゔゑ[illegible]	! ⊡[Y☐[Lt	D/	t[w		a	w		ｫ	ｷ		ゑ	ぇ	ん				3ｴ	3ｧ	3ｵ		3ｹ		{! [9! . [9		ゎゐ ゑれ3を3を	bh¤! ¹ ! L[! . [9
Y9Ð! ☞[! /Y☞ ♨[Lt{[h¤☞ ♨ /t!	ゎゐ ゔゑ[illegible]	! ⊡[Y☐[Lt	D/	t[w		a	w		ｫ										3ｧ	3ｵ	3ð			{! [9! . [9		ゎゐ ゑれ3を3を	bh¤! ¹ ! L[! . [9
Y9Ð! ☞[! /Y☞ ♨[Lt{[h¤☞ ♨ /t!	ゎゐ ゔゑ[illegible]	! ⊡[Y☐[Lt	D/	t[w		a	w					ゑ					3ｫ	3ｴ				3ｹ		{! [9! . [9		ゎゐ ゑれ3を3を	bh¤! ¹ ! L[! . [9
Y9Ð! ☞[! /Y☞ ♨[Lt{[h¤☞ ♨ /t!	ゎゐ ゔゑ[illegible]	! ⊡[Y☐[Lt	D/	t[w		a	w		ｫ			ゑ	ぇ				3ｫ	3ｴ						{! [9! . [9		ゎゐ ゑれ3を3を	bh¤! ¹ ! L[! . [9
Y9Ð! ☞[! /Y☞ ♨[Lt{[h¤☞ ♨ /t!	ゎゐ ゔゑ[illegible]	! ⊡[Y☐[Lt	D/	t[w		a	w		ｫ				ぇ	ん			3ｫ	3ｴ						{! [9! . [9		ゎゐ ゑれ3を3を	bh¤! ¹ ! L[! . [9
Y9Ð! ☞[! /Y☞ ♨[Lt{[h¤☞ ♨ /t!	ゎゐ ゔゑ[illegible]	! ⊡[Y☐[Lt	D/	t[w		a	w							ん				3ｴ						{! [9! . [9		ゎゐ ゑれ3を3を	bh¤! ¹ ! L[! . [9
Y9Ð! ☞[! /Y☞ ♨[Lt{[h¤☞ ♨ /t!	ゎゐ ゔゑ[illegible]	! ⊡[Y☐[Lt	D/	t[w		a	w							ん				3ｴ		3ｵ	3ð			{! [9! . [9		ゎゐ ゑれ3を3を	bh¤! ¹ ! L[! . [9
Y9Ð! ☞[! /Y☞ ♨[Lt{[h¤☞ ♨ /t!	ゎゐ ゔゑ[illegible]	! ⊡[Y☐[Lt	D/	t[w		a	w			ｷ	ð	ゑ						3ｴ	3ｧ		3ð	3ｹ		{! [9! . [9		ゎゐ ゑれ3を3を	bh¤! ¹ ! L[! . [9
Y9Ð! ☞[! /Y☞ ♨[Lt{[h¤☞ ♨ /t!	ゎゐ ゔゑ[illegible]	! ⊡[Y☐[Lt	D/	t[w		a	w		ｫ			ゑ	ぇ						3ｧ	3ｵ	3ð			{! [9! . [9		ゎゐ ゑれ3を3を	bh¤! ¹ ! L[! . [9
Y9Ð! ☞[! /Y☞ ♨[Lt{[h¤☞ ♨ /t!	ゎゐ ゔゑ[illegible]	! ⊡[Y☐[Lt	D/	t[w		a	w					ゑ	ぇ						3ｧ	3ｵ				{! [9! . [9		ゎゐ ゑれ3を3を	bh¤! ¹ ! L[! . [9
Y9Ð! ☞[! /Y☞ ♨[Lt{[h¤☞ ♨ /t!	ゎゐ ゔゑ[illegible]	! ⊡[Y☐[Lt	D/	t[w		a	w					ゑ	ぇ	ん			3ｫ	3ｴ	3ｧ	3ｵ				{! [9! . [9		ゎゐ ゑれ3を3を	bh¤! ¹ ! L[! . [9
Y9Ð! ☞[! /Y☞ ♨[Lt{[h¤☞ ♨ /t!	ゎゐ ゔゑ[illegible]	! ⊡[Y☐[Lt	D/	t[w		a	w		ｫ	ｷ	ð	ゑ												{! [9! . [9		ゎゐ ゑれ3を3を	bh¤! ¹ ! L[! . [9
Y9Ð! ☞[! /Y☞ ♨[Lt{[h¤☞ ♨ /t!	ゎゐ ゔゑ[illegible]	! ⊡[Y☐[Lt	D/	t[w		a	w											3ｴ		3ｵ	3ð			{! [9! . [9		ゎゐ ゑれ3を3を	bh¤! ¹ ! L[! . [9
Y9Ð! ☞[! /Y☞ ♨[Lt{[h¤☞ ♨ /t!	ゎゐ ゔゑ[illegible]	! ⊡[Y☐[Lt	D/	t[w		a	w											3ｴ			3ð			{! [9! . [9		ゎゐ ゑれ3を3を	bh¤! ¹ ! L[! . [9
Y9Ð! ☞[! /Y☞ ♨[Lt{[h¤☞ ♨ /t!	ゎゐ ゔゑ[illegible]	! ⊡[Y☐[Lt	D/	t[w		a	w					ゑ	ぇ	ん			3ｫ	3ｴ	3ｧ	3ｵ				{! [9! . [9		ゎゐ ゑれ3を3を	bh¤! ¹ ! L[! . [9
Y9Ð! ☞[! /Y☞ ♨[Lt{[h¤☞ ♨ /t!	ゎゐ ゔゑ[illegible]	! ⊡[Y☐[Lt	D/	t[w		a	w					ゑ		ん			3ｫ	3ｴ	3ｧ		3ð			{! [9! . [9		ゎゐ ゑれ3を3を	bh¤! ¹ ! L[! . [9
Y9Ð! ☞[! /Y☞ ♨[Lt{[h¤☞ ♨ /t!	ゎゐ ゔゑ[illegible]	! ⊡[Y☐[Lt	D/	t[w		a	w					ゑ					3ｫ	3ｴ						{! [9! . [9		ゎゐ ゑれ3を3を	bh¤! ¹ ! L[! . [9
Y9Ð! ☞[! /Y☞ ♨[Lt{[h¤☞ ♨ /t!	ゎゐ ゔゑ[illegible]	! ⊡[Y☐[Lt	D/	t[w		a	w		ｫ			ゑ	ぇ	ん			3ｫ	3ｴ	3ｧ	3ｵ	3ð			{! [9! . [9		ゎゐ ゑれ3を3を	bh¤! ¹ ! L[! . [9
Y9Ð! ☞[! /Y☞ ♨[Lt{[h¤☞ ♨ /t!	ゎゐ ゔゑ[illegible]	! ⊡[Y☐[Lt	D/	t[w		a	w					ゑ	ぇ											{! [9! . [9		ゎゐ ゑれ3を3を	bh¤! ¹ ! L[! . [9
Y9Ð! ☞[! /Y☞ ♨[Lt{[h¤☞ ♨ /t!	ゎゐ ゔゑ[illegible]	! ⊡[Y☐[Lt	D/	t[w		a	w					ゑ	ぇ				3ｫ	3ｴ						{! [9! . [9		ゎゐ ゑれ3を3を	bh¤! ¹ ! L[! . [9
Y9Ð! ☞[! /Y☞ ♨[Lt{[h¤☞ ♨ /t!	ゎゐ ゔゑ[illegible]	! ⊡[Y☐[Lt	D/	t[w		a	w						ぇ						3ｧ	3ｵ	3ð	3ｹ		{! [9! . [9		ゎゐ ゑれ3を3を	bh¤! ¹ ! L[! . [9
Y9Ð! ☞[! /Y☞ ♨[Lt{[h¤☞ ♨ /t!	ゎゐ ゔゑ[illegible]	! ⊡[Y☐[Lt	D/	t[w		a	w			ｷ		ゑ					3ｫ	3ｴ						{! [9! . [9		ゎゐ ゑれ3を3を	bh¤! ¹ ! L[! . [9
Y9Ð! ☞[! /Y☞ ♨[Lt{[h¤☞ ♨ /t!	ゎゐ ゔゑ[illegible]	! ⊡[Y☐[Lt	D/	t[w		a	w											3ｴ						{! [9! . [9		ゎゐ ゑれ3を3を	bh¤! ¹ ! L[! . [9
Y9Ð. ☞[LÐI ¤ DwL Ð☞ ♨[Lt{[h¤☞ ♨ /t!	ゎゐ ゔゑ[illegible]	. ⊡D☐[Lt	D/	t[w		a	w				ð		ぇ							3ｵ				{! [9! . [9		ゎゐ ゑれ3を3を	bh¤! ¹ ! L[! . [9

a ÆƷ気れƷ气 ! ĐIĐ. wl5 w9/9t¤! /[9{9![95 !{{9a.[Ða!¤{9![° l¤I /[lt{[h¤¤ゎƷÌI/!¹l¤l9{ ht9b、 .ha !b5 tlb h- ¤{I 99¤

!{{9a.[Ð59{/wlt¤lhb	!{{9a.[Ðt!w¤ b-a.9w	/hathb9b¤						.[h/Y95 ¤9wa lb![{																{¤!¤-{	/haa9b¤{	ht¤lhb![!¤¤!¤/Ia9b¤{{h[5{9t9wl¤9[Ð	
		¤I9tw9{9b/9hC!b!..w9¹ l! ¤lhb lb5l/!¤9{ ¤I9tw9{9b/9hC¤I!¤ /hathb9b¤						/!¹l¤Ð° l¤I !b-a.9wlb5l/!¤9{.[h/Y95 ¤9wa lb![th{l¤lhb /!¹l¤Ð° l¤Ih-¤!b-a.9wlb5l/!¤9{ht9b ¤9wa lb![th{l¤lhb																			
		Ih-{lbD Y9Ð≋h[hw	Dwhaa9¤ /!t	t[w	/t!	a!¤{9![	wlbD {9![	ろ	ゎ	わ	ゐ	ゑ	を	ん	ゔ	゛	3れ	3ろ	3ゎ	3わ	3ゐ	3ゑ	3を			.!/Y{I9[[° l¤I wl.{	.!/Y{I9[[° l¤Ih-¤ wl.{
Y9Ð!¤[!/Y¤ ≋[lt{[h¤¤ ≋h/t!	[illegible]	!⊡[Y⊘[lt	D/	t[w		a	w		ｫ				ｾ					3ｴ						{![9!.[9		[illegible]	bh¤!¹!l[!.[9
Y9Ð!¤[!/Y¤ ≋[lt{[h¤¤ ≋h/t!	[illegible]	!⊡[Y⊘[lt	D/	t[w		a	w		ｫ									3ｴ		3ｲ				{![9!.[9		[illegible]	bh¤!¹!l[!.[9
Y9Ð!¤[!/Y¤ ≋[lt{[h¤¤ ≋h/t!	[illegible]	!⊡[Y⊘[lt	D/	t[w		a	w		ｫ								3ｲ	3ｴ	3ｨ	3ｲ				{![9!.[9		[illegible]	bh¤!¹!l[!.[9
Y9Ð!¤[!/Y¤ ≋[lt{[h¤¤ ≋h/t!	[illegible]	!⊡[Y⊘[lt	D/	t[w		a	w		ｫ	ｷ	ƌ	ｽ						3ｴ		3ｲ				{![9!.[9		[illegible]	bh¤!¹!l[!.[9
Y9Ð!¤[!/Y¤ ≋[lt{[h¤¤ ≋h/t!	[illegible]	!⊡[Y⊘[lt	D/	t[w		a	w			ｷ				ɦ			3ｲ	3ｴ				3ﾇ		{![9!.[9		[illegible]	bh¤!¹!l[!.[9
Y9Ð!¤[!/Y¤ ≋[lt{[h¤¤ ≋h/t!	[illegible]	!⊡[Y⊘[lt	D/	t[w		a	w							ɦ					3ｨ	3ｲ	3ﾀ	3ﾇ		{![9!.[9		[illegible]	bh¤!¹!l[!.[9
Y9Ð!¤[!/Y¤ ≋[lt{[h¤¤ ≋h/t!	[illegible]	!⊡[Y⊘[lt	D/	t[w		a	w							ɦ								3ﾇ		{![9!.[9		[illegible]	bh¤!¹!l[!.[9
Y9Ð!¤[!/Y¤ ≋[lt{[h¤¤ ≋h/t!	[illegible]	!⊡[Y⊘[lt	D/	t[w		a	w										3ｲ		3ｨ	3ｲ				{![9!.[9		[illegible]	bh¤!¹!l[!.[9
Y9Ð!¤[!/Y¤ ≋[lt{[h¤¤ ≋h/t!	[illegible]	!⊡[Y⊘[lt	D/	t[w		a	w							ɦ			3ｲ	3ｴ	3ｨ	3ｲ				{![9!.[9		[illegible]	bh¤!¹!l[!.[9
Y9Ð!¤[!/Y¤ ≋[lt{[h¤¤ ≋h/t!	[illegible]	!⊡[Y⊘[lt	D/	t[w		a	w		ｫ	ｷ				ɦ				3ｴ	3ｨ					{![9!.[9		[illegible]	bh¤!¹!l[!.[9
Y9Ð!¤[!/Y¤ ≋[lt{[h¤¤ ≋h/t!	[illegible]	!⊡[Y⊘[lt	D/	t[w		a	w		ｫ	ｷ											3ﾀ			{![9!.[9		[illegible]	bh¤!¹!l[!.[9
Y9ÐC¤[lDI¤DwÐ ≋[lt{[h¤¤ ≋I w¤.!w ≋h/t!	[illegible]	C[ĐD⊘[lt	D/	t[w{[		a	w										3ｲ	3ｴ				3ﾇ		{![9!.[9		[illegible]	bh¤!¹!l[!.[9
Y9ÐC¤[lDI¤DwÐ ≋[lt{[h¤¤ ≋I w¤.!w ≋h/t!	[illegible]	C[ĐD⊘[lt	D/	t[w{[		a	w						ｾ	ɦ			3ｲ	3ｴ				3ﾇ		{![9!.[9		[illegible]	bh¤!¹!l[!.[9
Y9ÐC¤[lDI¤DwÐ ≋[lt{[h¤¤ ≋I w¤.!w ≋h/t!	[illegible]	C[ĐD⊘[lt	D/	t[w{[		a	w						ｾ	ɦ			3ｲ	3ｴ			3ﾀ	3ﾇ		{![9!.[9		[illegible]	bh¤!¹!l[!.[9
Y9Ð!¤[!/Y¤ ≋[lt{[h¤¤ ≋h/t!	[illegible]	!⊡[Y⊘[lt	D/	t[w		a	w											3ｴ		3ｲ	3ﾀ	3ﾇ		{![9!.[9		[illegible]	bh¤!¹!l[!.[9
Y9Ð!¤[!/Y¤ ≋[lt{[h¤¤ ≋h/t!	[illegible]	!⊡[Y⊘[lt	D/	t[w		a	w										3ｲ	3ｴ	3ｨ	3ｲ				{![9!.[9		[illegible]	bh¤!¹!l[!.[9
Y9Ð!¤[!/Y¤ ≋[lt{[h¤¤ ≋h/t!	[illegible]	!⊡[Y⊘[lt	D/	t[w		a	w		ｫ			ｽ	ｾ	ɦ			3ｲ	3ｴ						{![9!.[9		[illegible]	bh¤!¹!l[!.[9
Y9Ð!¤[!/Y¤ ≋[lt{[h¤¤ ≋h/t!	[illegible]	!⊡[Y⊘[lt	D/	t[w		a	w			ｷ			ｾ					3ｴ				3ﾇ		{![9!.[9		[illegible]	bh¤!¹!l[!.[9
Y9Ð!¤[!/Y¤ ≋[lt{[h¤¤ ≋h/t!	[illegible]	!⊡[Y⊘[lt	D/	t[w		a	w			ｷ			ｾ	ɦ			3ｲ	3ｴ				3ﾇ		{![9!.[9		[illegible]	bh¤!¹!l[!.[9
Y9Ð!¤[!/Y¤ ≋[lt{[h¤¤ ≋h/t!	[illegible]	!⊡[Y⊘[lt	D/	t[w		a	w							ɦ			3ｲ	3ｴ						{![9!.[9		[illegible]	bh¤!¹!l[!.[9
Y9Ð!¤[!/Y¤ ≋[lt{[h¤¤ ≋h/t!	[illegible]	!⊡[Y⊘[lt	D/	t[w		a	w					ｽ	ｾ	ɦ			3ｲ	3ｴ				3ﾇ		{![9!.[9		[illegible]	bh¤!¹!l[!.[9
Y9Ð!¤[!/Y¤ ≋[lt{[h¤¤ ≋h/t!	[illegible]	!⊡[Y⊘[lt	D/	t[w		a	w		ｫ															{![9!.[9		[illegible]	bh¤!¹!l[!.[9
Y9Ð!¤[!/Y¤ ≋[lt{[h¤¤ ≋h/t!	[illegible]	!⊡[Y⊘[lt	D/	t[w		a	w		ｫ								3ｲ	3ｴ		3ｲ				{![9!.[9		[illegible]	bh¤!¹!l[!.[9
Y9Ð!¤[!/Y¤ ≋[lt{[h¤¤ ≋h/t!	[illegible]	!⊡[Y⊘[lt	D/	t[w		a	w		ｫ	ｷ	ƌ	ｽ	ｾ											{![9!.[9		[illegible]	bh¤!¹!l[!.[9
Y9Ð!¤[!/Y¤ ≋[lt{[h¤¤ ≋h/t!	[illegible]	!⊡[Y⊘[lt	D/	t[w		a	w			ｷ	ƌ	ｽ	ｾ				3ｲ	3ｴ	3ｨ	3ｲ				{![9!.[9		[illegible]	bh¤!¹!l[!.[9
Y9Ð!¤[!/Y¤ ≋[lt{[h¤¤ ≋h/t!	[illegible]	!⊡[Y⊘[lt	D/	t[w		a	w			ｷ		ｽ					3ｲ							{![9!.[9		[illegible]	bh¤!¹!l[!.[9
Y9Ð!¤[!/Y¤ ≋[lt{[h¤¤ ≋h/t!	[illegible]	!⊡[Y⊘[lt	D/	t[w		a	w		ｫ	ｷ							3ｲ	3ｴ	3ｨ	3ｲ				{![9!.[9		[illegible]	bh¤!¹!l[!.[9
Y9Ð!¤[!/Y¤ ≋[lt{[h¤¤ ≋h/t!	[illegible]	!⊡[Y⊘[lt	D/	t[w		a	w			ｷ	ƌ	ｽ					3ｲ	3ｴ	3ｨ	3ｲ	3ﾀ	3ﾇ		{![9!.[9		[illegible]	bh¤!¹!l[!.[9
Y9Ð!¤Ð9[[h° ≋[lt{[h¤¤ ≋t!	[illegible]	!ĐP⊘[lt	D/	t[w	/t!	a	w		ｫ										3ｨ			3ﾇ		{![9!.[9		[illegible]	bh¤!¹!l[!.[9
Y9Ð!¤Ð9[[h° ≋[lt{[h¤¤ ≋t!	[illegible]	!ĐP⊘[lt	D/	t[w	/t!	a	w		ｫ	ｷ												3ﾇ		{![9!.[9		[illegible]	bh¤!¹!l[!.[9
Y9Ð!¤Ð9[[h° ≋[lt{[h¤¤ ≋t!	[illegible]	!ĐP⊘[lt	D/	t[w	/t!	a	w		ｫ												3ﾀ	3ﾇ		{![9!.[9		[illegible]	bh¤!¹!l[!.[9
Y9Ð!¤[!/Y¤ ≋[lt{[h¤¤ ≋h/t!	[illegible]	!⊡[Y⊘[lt	D/	t[w		a	w		ｫ		ƌ		ｾ				3ｲ		3ｨ	3ｲ				{![9!.[9		[illegible]	bh¤!¹!l[!.[9
Y9Ð!¤[!/Y¤ ≋[lt{[h¤¤ ≋h/t!	[illegible]	!⊡[Y⊘[lt	D/	t[w		a	w			ｷ			ｾ	ɦ								3ﾇ		{![9!.[9		[illegible]	bh¤!¹!l[!.[9
Y9Ð.¤[lDI¤DwÐ ≋[lt{[h¤¤ ≋t!	[illegible]	.[ĐD⊘[lt	D/	t[w	/t!	a	w		ｫ	ｷ											3ﾀ	3ﾇ		{![9!.[9		[illegible]	bh¤!¹!l[!.[9
Y9Ð.¤[lDI¤DwÐ ≋[lt{[h¤¤ ≋t!	[illegible]	.[ĐD⊘[lt	D/	t[w	/t!	a	w		ｫ	ｷ								3ｴ	3ｨ	3ｲ	3ﾀ	3ﾇ		{![9!.[9		[illegible]	bh¤!¹!l[!.[9
Y9Ð!¤[!/Y¤ ≋[lt{[h¤¤ ≋h/t!	[illegible]	!⊡[Y⊘[lt	D/	t[w		a	w			ｷ				ɦ			3ｲ	3ｴ	3ｨ	3ｲ	3ﾀ	3ﾇ		{![9!.[9		[illegible]	bh¤!¹!l[!.[9
Y9ÐC¤[lDI¤DwÐ ≋[lt{[h¤¤ ≋I w¤.!w ≋h/t!	[illegible]	C[ĐD⊘[lt	D/	t[w{[		a	w						ｾ	ɦ			3ｲ				3ﾀ	3ﾇ		{![9!.[9		[illegible]	bh¤!¹!l[!.[9
Y9ÐC¤[lDI¤DwÐ ≋[lt{[h¤¤ ≋I w¤.!w ≋h/t!	[illegible]	C[ĐD⊘[lt	D/	t[w{[		a	w		ｫ	ｷ			ｾ	ɦ			3ｲ				3ﾀ	3ﾇ		{![9!.[9		[illegible]	bh¤!¹!l[!.[9
Y9Ð!¤[!/Y¤ ≋[lt{[h¤¤ ≋h/t!	[illegible]	!⊡[Y⊘[lt	D/	t[w		a	w							ɦ										{![9!.[9		[illegible]	bh¤!¹!l[!.[9
Y9Ð!¤[!/Y¤ ≋[lt{[h¤¤ ≋h/t!	[illegible]	!⊡[Y⊘[lt	D/	t[w		a	w		ｫ												3ﾀ			{![9!.[9		[illegible]	bh¤!¹!l[!.[9
Y9ÐI¤Ð9[[h° ≋[lt{[h¤¤ ≋I w¤.!w ≋t!	[illegible]	IĐP⊘[lt	D/	t[w{[	/t!	a	w		ｫ	ｷ			ｾ	ɦ			3ｲ	3ｴ	3ｨ	3ｲ				{![9!.[9		[illegible]	bh¤!¹!l[!.[9
Y9ÐI¤Ð9[[h° ≋[lt{[h¤¤ ≋I w¤.!w ≋t!	[illegible]	IĐP⊘[lt	D/	t[w{[	/t!	a	w		ｫ	ｷ			ｾ	ɦ			3ｲ	3ｴ	3ｨ	3ｲ	3ﾀ	3ﾇ		{![9!.[9		[illegible]	bh¤!¹!l[!.[9
Y9Ð!¤[!/Y¤ ≋[lt{[h¤¤ ≋h/t!	[illegible]	!⊡[Y⊘[lt	D/	t[w		a	w			ｷ			ｾ	ɦ				3ｴ				3ﾇ		{![9!.[9		[illegible]	bh¤!¹!l[!.[9
Y9Ð!¤[!/Y¤ ≋[lt{[h¤¤ ≋h/t!	[illegible]	!⊡[Y⊘[lt	D/	t[w		a	w			ｷ	ƌ	ｽ					3ｲ	3ｴ	3ｨ					{![9!.[9		[illegible]	bh¤!¹!l[!.[9
Y9Ð!¤[!/Y¤ ≋[lt{[h¤¤ ≋h/t!	[illegible]	!⊡[Y⊘[lt	D/	t[w		a	w						ｾ	ɦ			3ｲ	3ｴ				3ﾇ		{![9!.[9		[illegible]	bh¤!¹!l[!.[9
Y9Ð!¤[!/Y¤ ≋[lt{[h¤¤ ≋h/t!	[illegible]	!⊡[Y⊘[lt	D/	t[w		a	w		ｫ	ｷ	ƌ	ｽ		ɦ										{![9!.[9		[illegible]	bh¤!¹!l[!.[9
Y9Ð!¤[!/Y¤ ≋[lt{[h¤¤ ≋h/t!	[illegible]	!⊡[Y⊘[lt	D/	t[w		a	w		ｫ				ｾ						3ｨ	3ｲ				{![9!.[9		[illegible]	bh¤!¹!l[!.[9
Y9Ð!¤[!/Y¤ ≋[lt{[h¤¤ ≋h/t!	[illegible]	!⊡[Y⊘[lt	D/	t[w		a	w		ｫ		ƌ		ｾ						3ｨ	3ｲ				{![9!.[9		[illegible]	bh¤!¹!l[!.[9
Y9Ð!¤[!/Y¤ ≋[lt{[h¤¤ ≋h/t!	[illegible]	!⊡[Y⊘[lt	D/	t[w		a	w		ｫ	ｷ				ɦ			3ｲ	3ｴ	3ｨ					{![9!.[9		[illegible]	bh¤!¹!l[!.[9
Y9Ð!¤[!/Y¤ ≋[lt{[h¤¤ ≋h/t!	[illegible]	!⊡[Y⊘[lt	D/	t[w		a	w		ｫ	ｷ							3ｲ	3ｴ	3ｨ					{![9!.[9		[illegible]	bh¤!¹!l[!.[9
Y9Ð.¤[lDI¤DwÐ ≋[lt{[h¤¤ ≋h/t!	[illegible]	.[ĐD⊘[lt	D/	t[w		a	w				ƌ	ｽ					3ｲ	3ｴ	3ｨ	3ｲ	3ﾀ	3ﾇ		{![9!.[9		[illegible]	bh¤!¹!l[!.[9
Y9Ð.¤[lDI¤DwÐ ≋[lt{[h¤¤ ≋h/t!	[illegible]	.[ĐD⊘[lt	D/	t[w		a	w		ｫ			ｽ	ｾ	ɦ				3ｴ						{![9!.[9		[illegible]	bh¤!¹!l[!.[9
Y9Ð!¤[!/Y¤ ≋[lt{[h¤¤ ≋h/t!	[illegible]	!⊡[Y⊘[lt	D/	t[w		a	w										3ｲ							{![9!.[9		[illegible]	bh¤!¹!l[!.[9
Y9Ð!¤[!/Y¤ ≋[lt{[h¤¤ ≋h/t!	[illegible]	!⊡[Y⊘[lt	D/	t[w		a	w										3ｲ	3ｴ						{![9!.[9		[illegible]	bh¤!¹!l[!.[9
Y9Ð!¤[!/Y¤ ≋[lt{[h¤¤ ≋h/t!	[illegible]	!⊡[Y⊘[lt	D/	t[w		a	w										3ｲ	3ｴ			3ﾀ	3ﾇ		{![9!.[9		[illegible]	bh¤!¹!l[!.[9
Y9Ð!¤[!/Y¤ ≋[lt{[h¤¤ ≋h/t!	[illegible]	!⊡[Y⊘[lt	D/	t[w		a	w										3ｲ				3ﾀ	3ﾇ		{![9!.[9		[illegible]	bh¤!¹!l[!.[9
Y9Ð!¤[!/Y¤ ≋[lt{[h¤¤ ≋h/t!	[illegible]	!⊡[Y⊘[lt	D/	t[w		a	w		ｫ			ｽ	ｾ				3ｲ	3ｴ			3ﾀ	3ﾇ		{![9!.[9		[illegible]	bh¤!¹!l[!.[9
Y9Ð!¤Ð9[[h° ≋[lt{[h¤¤ ≋t!	[illegible]	!ĐP⊘[lt	D/	t[w	/t!	a	w																	{![9!.[9		[illegible]	bh¤!¹!l[!.[9
Y9Ð!¤Ð9[[h° ≋[lt{[h¤¤ ≋h/t!	[illegible]	!ĐP⊘[lt	D/	t[w		a	w																	{![9!.[9		[illegible]	bh¤!¹!l[!.[9
Y9Ð.¤[lDI¤DwÐ ≋[lt{[h¤¤ ≋t!	[illegible]	.[ĐD⊘[lt	D/	t[w	/t!	a	w																	{![9!.[9		[illegible]	bh¤!¹!l[!.[9
Y9ÐI¤Ð9[[h° ≋[lt{[h¤¤ ≋I w¤.!w ≋t!	[illegible]	IĐP⊘[lt	D/	t[w{[	/t!	a	w		ｫ								3ｲ							{![9!.[9		[illegible]	bh¤!¹!l[!.[9
Y9ÐI¤Ð9[[h° ≋[lt{[h¤¤ ≋I w¤.!w ≋t!	[illegible]	IĐP⊘[lt	D/	t[w{[	/t!	a	w			ｷ			ｾ	ɦ								3ﾇ		{![9!.[9		[illegible]	bh¤!¹!l[!.[9
Y9Ð!¤[!/Y¤ ≋[lt{[h¤¤ ≋h/t!	[illegible]	!⊡[Y⊘[lt	D/	t[w		a	w			ｷ	ƌ	ｽ	ｾ	ɦ			3ｲ	3ｴ		3ｲ	3ﾀ	3ﾇ		{![9!.[9		[illegible]	bh¤!¹!l[!.[9
Y9Ð!¤[!/Y¤ ≋[lt{[h¤¤ ≋h/t!	[illegible]	!⊡[Y⊘[lt	D/	t[w		a	w		ｫ			ｽ	ｾ				3ｲ	3ｴ		3ｲ	3ﾀ			{![9!.[9		[illegible]	bh¤!¹!l[!.[9
Y9Ð!¤[!/Y¤ ≋[lt{[h¤¤ ≋h/t!	[illegible]	!⊡[Y⊘[lt	D/	t[w		a	w		ｫ								3ｲ	3ｴ		3ｲ	3ﾀ			{![9!.[9		[illegible]	bh¤!¹!l[!.[9
Y9Ð!¤[!/Y¤ ≋[lt{[h¤¤ ≋h/t!	[illegible]	!⊡[Y⊘[lt	D/	t[w		a	w													3ｲ				{![9!.[9		[illegible]	bh¤!¹!l[!.[9
Y9ÐC¤[lDI¤DwÐ ≋[lt{[h¤¤ ≋I w¤.!w ≋h/t!	[illegible]	C[ĐD⊘[lt	D/	t[w{[		a	w						ｾ	ɦ				3ｴ				3ﾇ		{![9!.[9		[illegible]	bh¤!¹!l[!.[9
Y9ÐC¤[lDI¤DwÐ ≋[lt{[h¤¤ ≋I w¤.!w ≋h/t!	[illegible]	C[ĐD⊘[lt	D/	t[w{[		a	w											3ｴ				3ﾇ		{![9!.[9		[illegible]	bh¤!¹!l[!.[9
Y9Ð!¤[!/Y¤ ≋[lt{[h¤¤ ≋h/t!	[illegible]	!⊡[Y⊘[lt	D/	t[w		a	w							ɦ			3ｲ							{![9!.[9		[illegible]	bh¤!¹!l[!.[9
Y9Ð.¤[lDI¤DwÐ ≋[lt{[h¤¤ ≋h/t!	[illegible]	.[ĐD⊘[lt	D/	t[w		a	w				ƌ	ｽ	ｾ	ɦ										{![9!.[9		[illegible]	bh¤!¹!l[!.[9
Y9Ð.¤[lDI¤DwÐ ≋[lt{[h¤¤ ≋h/t!	[illegible]	.[ĐD⊘[lt	D/	t[w		a	w							ɦ			3ｲ	3ｴ	3ｨ	3ｲ	3ﾀ	3ﾇ		{![9!.[9		[illegible]	bh¤!¹!l[!.[9
Y9Ð.¤[lDI¤DwÐ ≋[lt{[h¤¤ ≋h/t!	[illegible]	.[ĐD⊘[lt	D/	t[w		a	w		ｫ	ｷ	ƌ	ｽ	ｾ				3ｲ	3ｴ	3ｨ		3ﾀ	3ﾇ		{![9!.[9		[illegible]	bh¤!¹!l[!.[9
Y9Ð!¤[!/Y¤ ≋[lt{[h¤¤ ≋h/t!	[illegible]	!⊡[Y⊘[lt	D/	t[w		a	w												3ｨ	3ｲ				{![9!.[9		[illegible]	bh¤!¹!l[!.[9
Y9Ð!¤[!/Y¤ ≋[lt{[h¤¤ ≋h/t!	[illegible]	!⊡[Y⊘[lt	D/	t[w		a	w		ｫ	ｷ		ｽ	ｾ	ɦ			3ｲ	3ｴ	3ｨ	3ｲ				{![9!.[9		[illegible]	bh¤!¹!l[!.[9
Y9Ð!¤[!/Y¤ ≋[lt{[h¤¤ ≋h/t!	[illegible]	!⊡[Y⊘[lt	D/	t[w		a	w					ｽ		ɦ										{![9!.[9		[illegible]	bh¤!¹!l[!.[9
Y9Ð!¤[!/Y¤ ≋[lt{[h¤¤ ≋h/t!	[illegible]	!⊡[Y⊘[lt	D/	t[w		a	w					ｽ	ｾ	ɦ			3ｲ	3ｴ			3ﾀ			{![9!.[9		[illegible]	bh¤!¹!l[!.[9
Y9Ð!¤[!/Y¤ ≋[lt{[h¤¤ ≋h/t!	[illegible]	!⊡[Y⊘[lt	D/	t[w		a	w							ɦ			3ｲ	3ｴ			3ﾀ			{![9!.[9		[illegible]	bh¤!¹!l[!.[9
Y9Ð!¤[!/Y¤ ≋[lt{[h¤¤ ≋h/t!	[illegible]	!⊡[Y⊘[lt	D/	t[w		a	w		ｫ		ƌ	ｽ							3ｨ	3ｲ	3ﾀ	3ﾇ		{![9!.[9		[illegible]	bh¤!¹!l[!.[9
Y9Ð!¤[!/Y¤ ≋[lt{[h¤¤ ≋h/t!	[illegible]	!⊡[Y⊘[lt	D/	t[w		a	w		ｫ	ｷ	ƌ	ｽ							3ｨ	3ｲ	3ﾀ	3ﾇ		{![9!.[9		[illegible]	bh¤!¹!l[!.[9
Y9Ð!¤[!/Y¤ ≋[lt{[h¤¤ ≋h/t!	[illegible]	!⊡[Y⊘[lt	D/	t[w		a	w		ｫ			ｽ					3ｲ	3ｴ						{![9!.[9		[illegible]	bh¤!¹!l[!.[9
Y9Ð!¤[!/Y¤ ≋[lt{[h¤¤ ≋h/t!	[illegible]	!⊡[Y⊘[lt	D/	t[w		a	w			ｷ	ƌ	ｽ	ｾ	ɦ			3ｲ			3ｲ	3ﾀ	3ﾇ		{![9!.[9		[illegible]	bh¤!¹!l[!.[9
Y9Ð!¤[!/Y¤ ≋[lt{[h¤¤ ≋h/t!	[illegible]	!⊡[Y⊘[lt	D/	t[w		a	w													3ｲ		3ﾇ		{![9!.[9		[illegible]	bh¤!¹!l[!.[9
Y9Ð!¤[!/Y¤ ≋[lt{[h¤¤ ≋h/t!	[illegible]	!⊡[Y⊘[lt	D/	t[w		a	w										3ｲ			3ｲ	3ﾀ	3ﾇ		{![9!.[9		[illegible]	bh¤!¹!l[!.[9
Y9Ð!¤[!/Y¤ ≋[lt{[h¤¤ ≋h/t!	[illegible]	!⊡[Y⊘[lt	D/	t[w		a	w							ɦ			3ｲ		3ｨ					{![9!.[9		[illegible]	bh¤!¹!l[!.[9
Y9Ð!¤[!/Y¤ ≋[lt{[h¤¤ ≋h/t!	[illegible]	!⊡[Y⊘[lt	D/	t[w		a	w		ｫ	ｷ	ƌ	ｽ	ｾ	ɦ			3ｲ							{![9!.[9		[illegible]	bh¤!¹!l[!.[9
Y9Ð!¤[!/Y¤ ≋[lt{[h¤¤ ≋h/t!	[illegible]	!⊡[Y⊘[lt	D/	t[w		a	w			ｷ	ƌ	ｽ	ｾ	ɦ										{![9!.[9		[illegible]	bh¤!¹!l[!.[9
Y9Ð!¤[!/Y¤ ≋[lt{[h¤¤ ≋h/t!	[illegible]	!⊡[Y⊘[lt	D/	t[w		a	w			ｷ	ƌ		ｾ	ɦ			3ｲ	3ｴ		3ｲ	3ﾀ	3ﾇ		{![9!.[9		[illegible]	bh¤!¹!l[!.[9
Y9Ð.¤[lDI¤DwÐ ≋[lt{[h¤¤ ≋h/t!	[illegible]	.[ĐD⊘[lt	D/	t[w		a	w													3ｲ				{![9!.[9		[illegible]	bh¤!¹!l[!.[9
Y9Ð!¤[!/Y¤ ≋[lt{[h¤¤ ≋h/t!	[illegible]	!⊡[Y⊘[lt	D/	t[w		a	w			ｷ		ｽ	ｾ	ɦ			3ｲ			3ｲ	3ﾀ	3ﾇ		{![9!.[9		[illegible]	bh¤!¹!l[!.[9
Y9Ð!¤[!/Y¤ ≋[lt{[h¤¤ ≋h/t!	[illegible]	!⊡[Y⊘[lt	D/	t[w		a	w			ｷ							3ｲ	3ｴ	3ｨ	3ｲ				{![9!.[9		[illegible]	bh¤!¹!l[!.[9
Y9Ð!¤[!/Y¤ ≋[lt{[h¤¤ ≋h/t!	[illegible]	!⊡[Y⊘[lt	D/	t[w		a	w										3ｲ	3ｴ	3ｨ		3ﾀ	3ﾇ		{![9!.[9		[illegible]	bh¤!¹!l[!.[9
Y9Ð!¤[!/Y¤ ≋[lt{[h¤¤ ≋h/t!	[illegible]	!⊡[Y⊘[lt	D/	t[w		a	w					ｽ	ｾ	ɦ			3ｲ	3ｴ	3ｨ	3ｲ	3ﾀ	3ﾇ		{![9!.[9		[illegible]	bh¤!¹!l[!.[9
Y9Ð!¤[!/Y¤ ≋[lt{[h¤¤ ≋h/t!	[illegible]	!⊡[Y⊘[lt	D/	t[w		a	w					ｽ	ｾ	ɦ			3ｲ	3ｴ						{![9!.[9		[illegible]	bh¤!¹!l[!.[9
Y9Ð!¤[!/Y¤ ≋[lt{[h¤¤ ≋h/t!	[illegible]	!⊡[Y⊘[lt	D/	t[w		a	w					ｽ		ɦ					3ｨ	3ｲ		3ﾇ		{![9!.[9		[illegible]	bh¤!¹!l[!.[9
Y9Ð!¤[!/Y¤ ≋[lt{[h¤¤ ≋h/t!	[illegible]	!⊡[Y⊘[lt	D/	t[w		a	w		ｫ	ｷ	ƌ	ｽ		ɦ					3ｨ	3ｲ	3ﾀ	3ﾇ		{![9!.[9		[illegible]	bh¤!¹!l[!.[9

molex

a Æ3ゑれ3を° ! ÐI Ð. wЦ5 w9/9t ¤! /[9{9! [95 ! {{9a . [Ða ! ¤{9! [° Ц¤I /[Цt{[h¤¤わ3ゔI I /! ¹ Ц¤Ц9{ ht 9b、 . ha ! b5 t Цb h- ¤{I 99¤

! {{9a . [Ð59{/wЦt ¤Цhb	! {{9a . [Ðt! w¤ b- a . 9w	/ha thb9b¤ ¤I 9 t w9{9b/9 hC! b! . . w9¹ Ц ¤Цhb Цb5 Ц! ¤9{ ¤I 9 t w9{9b/9 hC¤I ! ¤ /ha thb9b¤						. [h/Y95 ¤9wa Цb! [{ /! ¹ Ц¤Ð° Ц¤I ! b- a . 9wЦb5 Ц! ¤9{ . [h/Y95 ¤9wa Цb! [t h{Ц¤Цhb /! ¹ Ц¤Ð° Ц¤I h- ¤! b- a . 9wЦb5 Ц! ¤9{ ht 9b ¤9wa Цb! [t h{Ц¤Цhb																{¤! ¤- {	/ha a 9b¤{	ht ¤Цhb! [! ¤¤! ¤/I a 9b¤{ {h[5 {9t 9wЦ ¤9[Ð	
		I h- {ЦbD Y9Ð¥h[hw	Dwha a 9¤ /! t	t[w	/t!	a ! ¤{9! [	wЦb D {9! [	ろ	ゎ	わ	ゐ	ゑ	を	ん	ゔ	゛	3れ	3ろ	3ゎ	3わ	3ゐ	3ゑ	3を			. ! /Y{I 9[[° Ц¤I wЦ {	. ! /Y{I 9[[° Ц¤I h- ¤ wЦ {
Y9Ð. ¤[ЦDI ¤ DwЦ Ð ¥[Цt{[h¤ Цh /t!	[illegible]	. [ĐD[Цt	D/	t[w		a	w			[illegible]							[illegible]	[illegible]		[illegible]				{! [9! . [9		[illegible]	bh¤! ¹! Ц! . [9
Y9Ð. ¤[ЦDI ¤ DwЦ Ð ¥[Цt{[h¤ Цh /t!	[illegible]	. [ĐD[Цt	D/	t[w		a	w			[illegible]	[illegible]	[illegible]	[illegible]	[illegible]			[illegible]	[illegible]						{! [9! . [9		[illegible]	bh¤! ¹! Ц! . [9
Y9Ð. ¤[ЦDI ¤ DwЦ Ð ¥[Цt{[h¤ Цh /t!	[illegible]	. [ĐD[Цt	D/	t[w		a	w				[illegible]	[illegible]	[illegible]	[illegible]			[illegible]	[illegible]						{! [9! . [9		[illegible]	bh¤! ¹! Ц! . [9
Y9Ð! ¤[! /Y ¥[Цt{[h¤ Цh /t!	[illegible]	! [Y[Цt	D/	t[w		a	w			[illegible]		[illegible]										[illegible]		{! [9! . [9		[illegible]	bh¤! ¹! Ц! . [9
Y9Ð! ¤[! /Y ¥[Цt{[h¤ Цh /t!	[illegible]	! [Y[Цt	D/	t[w		a	w					[illegible]	[illegible]	[illegible]				[illegible]	[illegible]					{! [9! . [9		[illegible]	bh¤! ¹! Ц! . [9
Y9Ð! ¤[! /Y ¥[Цt{[h¤ Цh /t!	[illegible]	! [Y[Цt	D/	t[w		a	w		[illegible]			[illegible]					[illegible]				[illegible]			{! [9! . [9		[illegible]	bh¤! ¹! Ц! . [9
Y9Ð! ¤[! /Y ¥[Цt{[h¤ Цh /t!	[illegible]	! [Y[Цt	D/	t[w		a	w					[illegible]		[illegible]				[illegible]	[illegible]					{! [9! . [9		[illegible]	bh¤! ¹! Ц! . [9
Y9Ð! ¤[! /Y ¥[Цt{[h¤ Цh /t!	[illegible]	! [Y[Цt	D/	t[w		a	w		[illegible]					[illegible]			[illegible]	[illegible]	[illegible]	[illegible]	[illegible]			{! [9! . [9		[illegible]	bh¤! ¹! Ц! . [9
Y9Ð. ¤[ЦDI ¤ DwЦ Ð ¥[Цt{[h¤ Цt!	[illegible]	. [ĐD[Цt	D/	t[w	/t!	a	w			[illegible]							[illegible]	[illegible]	[illegible]	[illegible]	[illegible]			{! [9! . [9		[illegible]	bh¤! ¹! Ц! . [9
Y9Ð/¤5! wY DwЦ Ð ¥[Цt{[h¤ Цt!	[illegible]	/ [5D[Цt	D/	t[w	/t!	a	w			[illegible]	[illegible]		[illegible]	[illegible]			[illegible]	[illegible]		[illegible]	[illegible]	[illegible]		{! [9! . [9		[illegible]	bh¤! ¹! Ц! . [9
Y9Ð! ¤[! /Y ¥[Цt{[h¤ Цh /t!	[illegible]	! [Y[Цt	D/	t[w		a	w			[illegible]	[illegible]	[illegible]	[illegible]				[illegible]		[illegible]			[illegible]		{! [9! . [9		[illegible]	bh¤! ¹! Ц! . [9
Y9Ð! ¤[! /Y ¥[Цt{[h¤ Цh /t!	[illegible]	! [Y[Цt	D/	t[w		a	w			[illegible]	[illegible]	[illegible]	[illegible]				[illegible]	[illegible]	[illegible]	[illegible]		[illegible]		{! [9! . [9		[illegible]	bh¤! ¹! Ц! . [9
Y9Ð! ¤[! /Y ¥[Цt{[h¤ Цh /t!	[illegible]	! [Y[Цt	D/	t[w		a	w		[illegible]								[illegible]							{! [9! . [9		[illegible]	bh¤! ¹! Ц! . [9
Y9Ð! ¤[! /Y ¥[Цt{[h¤ Цh /t!	[illegible]	! [Y[Цt	D/	t[w		a	w			[illegible]			[illegible]											{! [9! . [9		[illegible]	bh¤! ¹! Ц! . [9
Y9Ð! ¤[! /Y ¥[Цt{[h¤ Цh /t!	[illegible]	! [Y[Цt	D/	t[w		a	w		[illegible]	[illegible]	[illegible]	[illegible]	[illegible]	[illegible]										{! [9! . [9		[illegible]	bh¤! ¹! Ц! . [9
Y9Ð! ¤[! /Y ¥[Цt{[h¤ Цh /t!	[illegible]	! [Y[Цt	D/	t[w		a	w		[illegible]	[illegible]	[illegible]	[illegible]	[illegible]	[illegible]			[illegible]	[illegible]	[illegible]	[illegible]				{! [9! . [9		[illegible]	bh¤! ¹! Ц! . [9
Y9Ð! ¤[! /Y ¥[Цt{[h¤ Цh /t!	[illegible]	! [Y[Цt	D/	t[w		a	w					[illegible]		[illegible]					[illegible]	[illegible]				{! [9! . [9		[illegible]	bh¤! ¹! Ц! . [9
Y9Ð! ¤[! /Y ¥[Цt{[h¤ Цh /t!	[illegible]	! [Y[Цt	D/	t[w		a	w					[illegible]					[illegible]				[illegible]	[illegible]		{! [9! . [9		[illegible]	bh¤! ¹! Ц! . [9
Y9Ð! ¤[! /Y ¥[Цt{[h¤ Цh /t!	[illegible]	! [Y[Цt	D/	t[w		a	w					[illegible]					[illegible]	[illegible]	[illegible]	[illegible]				{! [9! . [9		[illegible]	bh¤! ¹! Ц! . [9
Y9Ð! ¤[! /Y ¥[Цt{[h¤ Цh /t!	[illegible]	! [Y[Цt	D/	t[w		a	w		[illegible]	[illegible]		[illegible]					[illegible]	[illegible]	[illegible]	[illegible]				{! [9! . [9		[illegible]	bh¤! ¹! Ц! . [9
Y9Ð! ¤[! /Y ¥[Цt{[h¤ Цh /t!	[illegible]	! [Y[Цt	D/	t[w		a	w		[illegible]			[illegible]	[illegible]	[illegible]				[illegible]	[illegible]			[illegible]		{! [9! . [9		[illegible]	bh¤! ¹! Ц! . [9
Y9Ð! ¤[! /Y ¥[Цt{[h¤ Цh /t!	[illegible]	! [Y[Цt	D/	t[w		a	w			[illegible]		[illegible]	[illegible]				[illegible]	[illegible]		[illegible]		[illegible]		{! [9! . [9		[illegible]	bh¤! ¹! Ц! . [9
Y9Ð! ¤[! /Y ¥[Цt{[h¤ Цh /t!	[illegible]	! [Y[Цt	D/	t[w		a	w			[illegible]		[illegible]												{! [9! . [9		[illegible]	bh¤! ¹! Ц! . [9
Y9Ð! ¤[! /Y ¥[Цt{[h¤ Цh /t!	[illegible]	! [Y[Цt	D/	t[w		a	w			[illegible]		[illegible]	[illegible]	[illegible]			[illegible]	[illegible]		[illegible]		[illegible]		{! [9! . [9		[illegible]	bh¤! ¹! Ц! . [9
Y9Ð! ¤[! /Y ¥[Цt{[h¤ Цh /t!	[illegible]	! [Y[Цt	D/	t[w		a	w			[illegible]			[illegible]	[illegible]										{! [9! . [9		[illegible]	bh¤! ¹! Ц! . [9
Y9Ð! ¤[! /Y ¥[Цt{[h¤ Цh /t!	[illegible]	! [Y[Цt	D/	t[w		a	w			[illegible]			[illegible]						[illegible]		[illegible]			{! [9! . [9		[illegible]	bh¤! ¹! Ц! . [9
Y9Ð! ¤[! /Y ¥[Цt{[h¤ Цh /t!	[illegible]	! [Y[Цt	D/	t[w		a	w			[illegible]		[illegible]		[illegible]						[illegible]	[illegible]	[illegible]		{! [9! . [9		[illegible]	bh¤! ¹! Ц! . [9
Y9Ð! ¤[! /Y ¥[Цt{[h¤ Цh /t!	[illegible]	! [Y[Цt	D/	t[w		a	w					[illegible]		[illegible]						[illegible]	[illegible]	[illegible]		{! [9! . [9		[illegible]	bh¤! ¹! Ц! . [9
Y9Ð! ¤[! /Y ¥[Цt{[h¤ Цh /t!	[illegible]	! [Y[Цt	D/	t[w		a	w			[illegible]	[illegible]	[illegible]	[illegible]	[illegible]			[illegible]	[illegible]	[illegible]	[illegible]	[illegible]	[illegible]		{! [9! . [9		[illegible]	bh¤! ¹! Ц! . [9
Y9Ð. ¤[ЦDI ¤ DwЦ Ð ¥[Цt{[h¤ Цh /t!	[illegible]	. [ĐD[Цt	D/	t[w		a	w			[illegible]							[illegible]	[illegible]						{! [9! . [9		[illegible]	bh¤! ¹! Ц! . [9
Y9Ð. ¤[ЦDI ¤ DwЦ Ð ¥[Цt{[h¤ Цh /t!	[illegible]	. [ĐD[Цt	D/	t[w		a	w			[illegible]	[illegible]	[illegible]					[illegible]	[illegible]		[illegible]				{! [9! . [9		[illegible]	bh¤! ¹! Ц! . [9
Y9Ð! ¤[! /Y ¥[Цt{[h¤ Цh /t!	[illegible]	! [Y[Цt	D/	t[w		a	w												[illegible]					{! [9! . [9		[illegible]	bh¤! ¹! Ц! . [9
Y9Ð! ¤[! /Y ¥[Цt{[h¤ Цh /t!	[illegible]	! [Y[Цt	D/	t[w		a	w															[illegible]		{! [9! . [9		[illegible]	bh¤! ¹! Ц! . [9
Y9Ð! ¤[! /Y ¥[Цt{[h¤ Цh /t!	[illegible]	! [Y[Цt	D/	t[w		a	w							[illegible]			[illegible]	[illegible]			[illegible]	[illegible]		{! [9! . [9		[illegible]	bh¤! ¹! Ц! . [9
Y9Ð! ¤[! /Y ¥[Цt{[h¤ Цh /t!	[illegible]	! [Y[Цt	D/	t[w		a	w					[illegible]						[illegible]	[illegible]			[illegible]		{! [9! . [9		[illegible]	bh¤! ¹! Ц! . [9
Y9Ð! ¤[! /Y ¥[Цt{[h¤ Цh /t!	[illegible]	! [Y[Цt	D/	t[w		a	w			[illegible]	[illegible]											[illegible]		{! [9! . [9		[illegible]	bh¤! ¹! Ц! . [9
Y9Ð. ¤[ЦDI ¤ DwЦ Ð ¥[Цt{[h¤ Цh /t!	[illegible]	. [ĐD[Цt	D/	t[w		a	w										[illegible]		[illegible]	[illegible]	[illegible]	[illegible]		{! [9! . [9		[illegible]	bh¤! ¹! Ц! . [9
Y9Ð. ¤[ЦDI ¤ DwЦ Ð ¥[Цt{[h¤ Цh /t!	[illegible]	. [ĐD[Цt	D/	t[w		a	w							[illegible]						[illegible]				{! [9! . [9		[illegible]	bh¤! ¹! Ц! . [9
Y9Ð! ¤[! /Y ¥[Цt{[h¤ Цh /t!	[illegible]	! [Y[Цt	D/	t[w		a	w					[illegible]	[illegible]	[illegible]				[illegible]						{! [9! . [9		[illegible]	bh¤! ¹! Ц! . [9
Y9Ð! ¤[! /Y ¥[Цt{[h¤ Цh /t!	[illegible]	! [Y[Цt	D/	t[w		a	w			[illegible]	[illegible]	[illegible]										[illegible]		{! [9! . [9		[illegible]	bh¤! ¹! Ц! . [9
Y9Ð! ¤[! /Y ¥[Цt{[h¤ Цh /t!	[illegible]	! [Y[Цt	D/	t[w		a	w					[illegible]	[illegible]				[illegible]		[illegible]	[illegible]				{! [9! . [9		[illegible]	bh¤! ¹! Ц! . [9
Y9Ð! ¤[! /Y ¥[Цt{[h¤ Цh /t!	[illegible]	! [Y[Цt	D/	t[w		a	w					[illegible]	[illegible]				[illegible]		[illegible]	[illegible]	[illegible]	[illegible]		{! [9! . [9		[illegible]	bh¤! ¹! Ц! . [9
Y9Ð! ¤[! /Y ¥[Цt{[h¤ Цh /t!	[illegible]	! [Y[Цt	D/	t[w		a	w					[illegible]	[illegible]				[illegible]							{! [9! . [9		[illegible]	bh¤! ¹! Ц! . [9
Y9Ð! ¤[! /Y ¥[Цt{[h¤ Цh /t!	[illegible]	! [Y[Цt	D/	t[w		a	w					[illegible]	[illegible]	[illegible]				[illegible]	[illegible]	[illegible]				{! [9! . [9		[illegible]	bh¤! ¹! Ц! . [9
Y9Ð! ¤[! /Y ¥[Цt{[h¤ Цh /t!	[illegible]	! [Y[Цt	D/	t[w		a	w							[illegible]				[illegible]		[illegible]	[illegible]	[illegible]		{! [9! . [9		[illegible]	bh¤! ¹! Ц! . [9
Y9Ð! ¤[! /Y ¥[Цt{[h¤ Цh /t!	[illegible]	! [Y[Цt	D/	t[w		a	w							[illegible]					[illegible]		[illegible]			{! [9! . [9		[illegible]	bh¤! ¹! Ц! . [9
Y9Ð! ¤[! /Y ¥[Цt{[h¤ Цh /t!	[illegible]	! [Y[Цt	D/	t[w		a	w			[illegible]		[illegible]		[illegible]				[illegible]		[illegible]	[illegible]	[illegible]		{! [9! . [9		[illegible]	bh¤! ¹! Ц! . [9
Y9Ð! ¤[! /Y ¥[Цt{[h¤ Цh /t!	[illegible]	! [Y[Цt	D/	t[w		a	w				[illegible]						[illegible]	[illegible]	[illegible]					{! [9! . [9		[illegible]	bh¤! ¹! Ц! . [9
Y9Ð! ¤[! /Y ¥[Цt{[h¤ Цh /t!	[illegible]	! [Y[Цt	D/	t[w		a	w			[illegible]											[illegible]			{! [9! . [9		[illegible]	bh¤! ¹! Ц! . [9
Y9Ð. ¤[ЦDI ¤ DwЦ Ð ¥[Цt{[h¤ Цh /t!	[illegible]	. [ĐD[Цt	D/	t[w		a	w			[illegible]	[illegible]	[illegible]	[illegible]	[illegible]			[illegible]	[illegible]	[illegible]	[illegible]	[illegible]	[illegible]		{! [9! . [9		[illegible]	bh¤! ¹! Ц! . [9
Y9Ð. ¤[ЦDI ¤ DwЦ Ð ¥[Цt{[h¤ Цh /t!	[illegible]	. [ĐD[Цt	D/	t[w		a	w				[illegible]	[illegible]		[illegible]			[illegible]	[illegible]						{! [9! . [9		[illegible]	bh¤! ¹! Ц! . [9
Y9Ð! ¤[! /Y ¥[Цt{[h¤ Цh /t!	[illegible]	! [Y[Цt	D/	t[w		a	w										[illegible]	[illegible]		[illegible]				{! [9! . [9		[illegible]	bh¤! ¹! Ц! . [9
Y9Ð! ¤[! /Y ¥[Цt{[h¤ Цh /t!	[illegible]	! [Y[Цt	D/	t[w		a	w			[illegible]			[illegible]	[illegible]			[illegible]	[illegible]			[illegible]	[illegible]		{! [9! . [9		[illegible]	bh¤! ¹! Ц! . [9
Y9Ð! ¤[! /Y ¥[Цt{[h¤ Цt!	[illegible]	! [Y[Цt	D/	t[w	/t!	a	w				[illegible]			[illegible]					[illegible]	[illegible]		[illegible]		{! [9! . [9		[illegible]	bh¤! ¹! Ц! . [9
Y9Ð. ¤[ЦDI ¤ DwЦ Ð ¥[Цt{[h¤ Цh /t!	[illegible]	. [ĐD[Цt	D/	t[w		a	w										[illegible]							{! [9! . [9		[illegible]	bh¤! ¹! Ц! . [9
Y9Ð! ¤[! /Y ¥[Цt{[h¤ Цh /t!	[illegible]	! [Y[Цt	D/	t[w		a	w				[illegible]	[illegible]	[illegible]											{! [9! . [9		[illegible]	bh¤! ¹! Ц! . [9
Y9Ð! ¤[! /Y ¥[Цt{[h¤ Цt!	[illegible]	! [Y[Цt	D/	t[w	/t!	a	w		[illegible]			[illegible]	[illegible]				[illegible]	[illegible]			[illegible]	[illegible]		{! [9! . [9		[illegible]	bh¤! ¹! Ц! . [9
Y9Ð! ¤[! /Y ¥[Цt{[h¤ Цt!	[illegible]	! [Y[Цt	D/	t[w	/t!	a	w		[illegible]			[illegible]	[illegible]								[illegible]	[illegible]		{! [9! . [9		[illegible]	bh¤! ¹! Ц! . [9
Y9Ð! ¤[! /Y ¥[Цt{[h¤ Цt!	[illegible]	! [Y[Цt	D/	t[w	/t!	a	w										[illegible]	[illegible]			[illegible]	[illegible]		{! [9! . [9		[illegible]	bh¤! ¹! Ц! . [9
Y9Ð! ¤[! /Y ¥[Цt{[h¤ Цt!	[illegible]	! [Y[Цt	D/	t[w	/t!	a	w														[illegible]	[illegible]		{! [9! . [9		[illegible]	bh¤! ¹! Ц! . [9
Y9Ð! ¤[! /Y ¥[Цt{[h¤ Цh /t!	[illegible]	! [Y[Цt	D/	t[w		a	w							[illegible]			[illegible]	[illegible]		[illegible]	[illegible]	[illegible]		{! [9! . [9		[illegible]	bh¤! ¹! Ц! . [9
Y9Ð! ¤[! /Y ¥[Цt{[h¤ Цh /t!	[illegible]	! [Y[Цt	D/	t[w		a	w		[illegible]		[illegible]	[illegible]					[illegible]	[illegible]	[illegible]	[illegible]	[illegible]			{! [9! . [9		[illegible]	bh¤! ¹! Ц! . [9
Y9Ð. ¤[ЦDI ¤ DwЦ Ð ¥[Цt{[h¤ Цh /t!	[illegible]	. [ĐD[Цt	D/	t[w		a	w		[illegible]	[illegible]	[illegible]	[illegible]		[illegible]							[illegible]	[illegible]		{! [9! . [9		[illegible]	bh¤! ¹! Ц! . [9
Y9Ð. ¤[ЦDI ¤ DwЦ Ð ¥[Цt{[h¤ Цh /t!	[illegible]	. [ĐD[Цt	D/	t[w		a	w											[illegible]						{! [9! . [9		[illegible]	bh¤! ¹! Ц! . [9
Y9Ð. ¤[ЦDI ¤ DwЦ Ð ¥[Цt{[h¤ Цh /t!	[illegible]	. [ĐD[Цt	D/	t[w		a	w		[illegible]		[illegible]	[illegible]		[illegible]							[illegible]	[illegible]		{! [9! . [9		[illegible]	bh¤! ¹! Ц! . [9