RoHS COMPLIANT

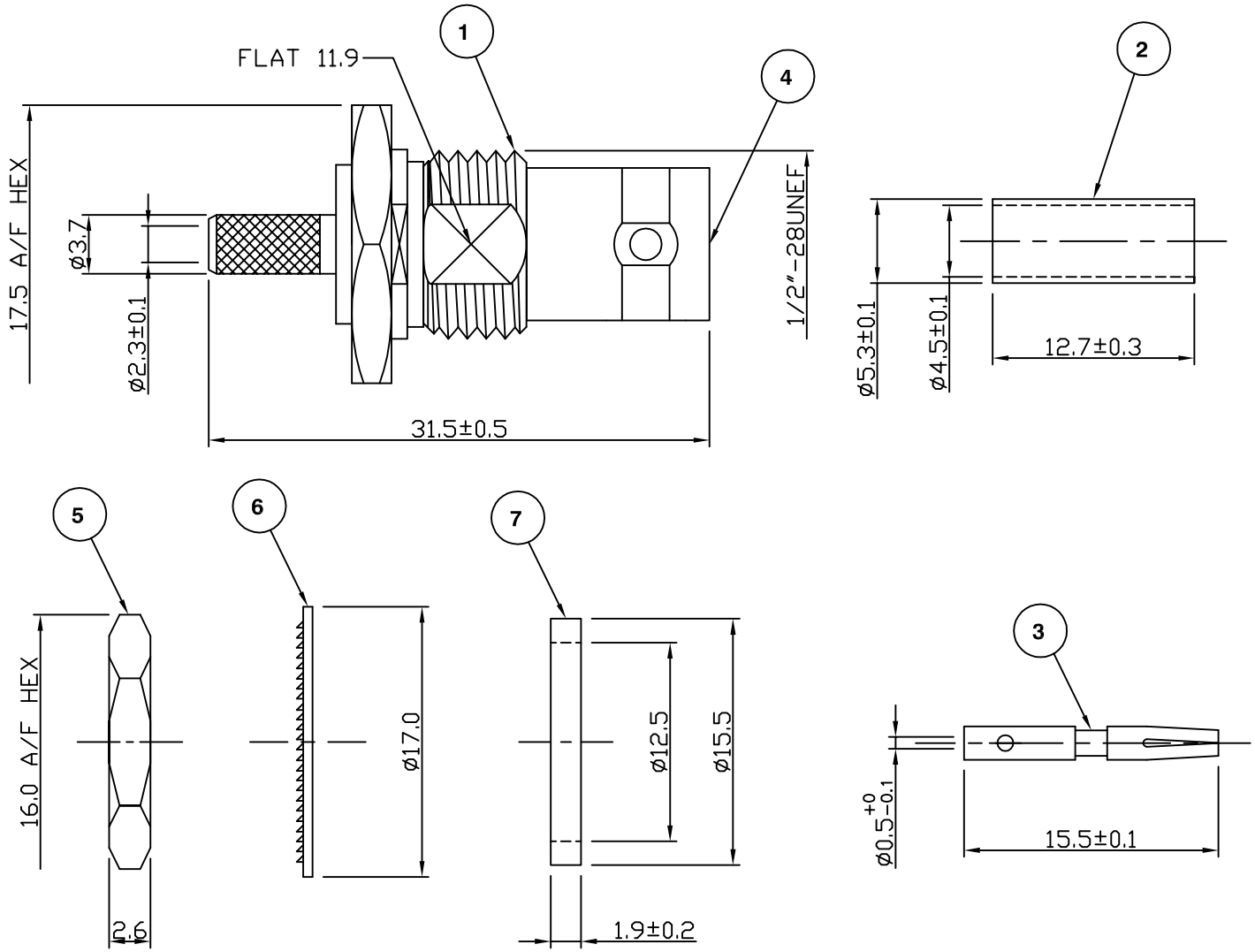

For stripping and assembly instuctions see Drawing Number: VAIB4101

Electrical Characteristics

Nominal Impedance:	50 ohms
Frequency Range:	DC to 4 GHz
VSWR:	1.35:1 maximum
Insertion Loss:	0.2 dB at 3 GHz
Operating Voltage (rms):	500 V maximum at sea level
Dielectric Withstand Voltage (rms):	1500 V maximum at sea level
Contact Resistance:	1.5 milliohms maximum
Insulation Resistance:	5000 megohms minimum

Mechanical Characteristics

Mating Cycles:	500 cycles minimum
Interface Dimensions:	Conform to MIL-C-39012

Environmental Characteristics

Temperature Range:	-65 °C to +165 °C

	PART	DESCRIPTION
1	Body	Brass, nickel plated 1.78 µm
2	Ferrule	Brass, nickel plated 1.78 µm
3	Contact	Brass, gold plated 0.076 µm - 0.127 µm
4	Dielectric	PTFE
5	Nut	Brass, nickel plated 1.78 µm
6	Washer	Steel, nickel plated 1.78 µm
7	Gasket	Silicone, red

DESCRIPTION OF REVISION	APPVD	ISS	DATE
HEX Modification	SN	4	27 Jun 02
CAD Issue	SN	3	22 Jan 02
Up Issued	AT	2	19 Oct 00
First Issue	DH	1	01 Jul 97

cinch CONNECTIVITY SOLUTIONS a bel group

Cinch Connectivity Solutions
7-13 Russell Way,
Widford Industrial Estate,
Chelmsford,Essex,
CM1 3AA, UK.
Tel: +44 (0) 1245 359515
Fax: +44 (0) 1245 358938

SCALE: Not To Scale	DRAWN BY:	S Nash	TITLE: BNC Bulkhead Crimp Jack for BT3002
DIMENSIONS: mm	CHECKED BY:	R Drenan	PART NUMBER: VB40-2062
TOLERANCES: ± 0.2mm unless otherwise stated	APPROVED BY:	P D Couzens	
	DATE:	27 Jun 02	PAGE: 1 of 1

COPYRIGHT © 2002 VITELEC ELECTRONICS LIMITED

THIS DRAWING MAY NOT BE REPRODUCED IN WHOLE OR IN PART WITHOUT OUR WRITTEN PERMISSION