THIS COPY IS PROVIDED ON A RESTRICTED BASIS AND IS NOT TO BE USED IN ANY WAY DETRIMENTAL TO THE INTERESTS OF PANDUIT CORP.

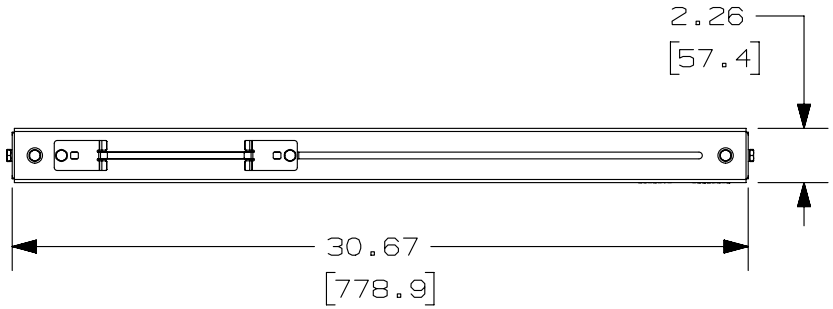

PANDUIT PART NUMBER	WEIGHT
G WG30FRTB**	5.58 LBS/EACH (2531.0 g/EACH)

F NOTES:
1. PANDUIT PART NUMBER WG30FRTB** INCLUDES:
   G
   A. ONE (1) WYR-GRID 30" WIDTH FIBERRUNNER TRAPEZE BRACKET ASSEMBLY FOR 4X4 AND 6X4
   B. TWO (2) WYR-GRID FIBERRUNNER TRAPEZE UPRIGHT SUPPORT BRACKET ASSEMBLIES
   C. TWO (2) 1/4-20 X 3/4 HEX HEAD CAP SCREWS
   D. FOUR (4) 1/4 -20 HELICAL SPRING LOCKWASHERS
   E. TWO (2) 1/4-20 SAE FLAT WASHER
   F. TWO (2) WYR-GRID INTEFRAL BRACKET LOWER CLIP ASSEMBLIES
   G. TWO (2) 1/4-20 X 1-1/8 HEX HEAD CAP SCREWS
2. DIMENSIONS IN PARENTHESES ARE METRIC.
3. H PROVIDED ABILITY TO MOUNT FIBERRUNNER 6.6" TO 9.9" ABOVE WYR-GRID.
4. SEE CATALOG FOR ADDITIONAL PART SUFFIXES TO INDICATE PART FINISH AND/OR PACKAGE QUANTITY.

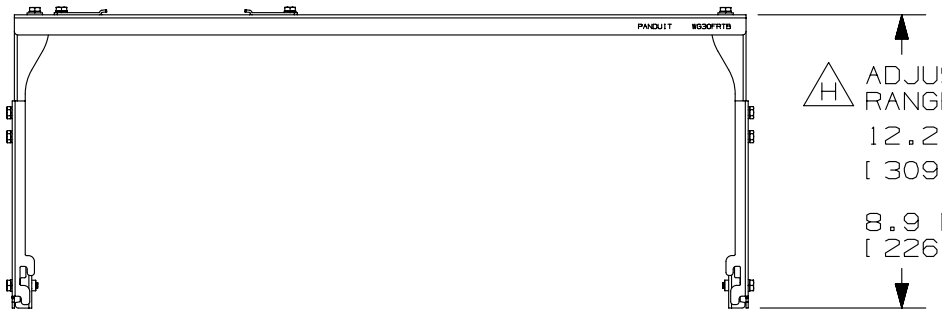

E

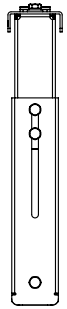

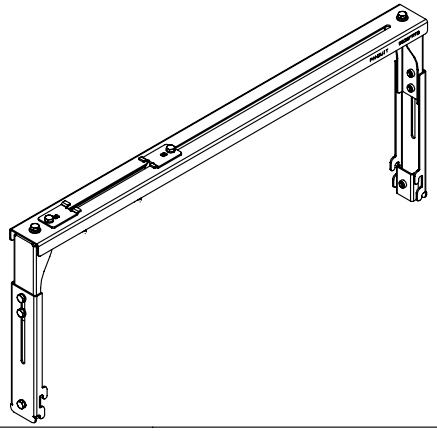

REV	DATE	BY	CHK	APR	DESCRIPTION	ECN
3	04-08-13	SSP	DWR	RN	RELEASED TO PRODUCTION H. REVISED THE ADJUSTMENT RANGE TOLERANCES G. ADDED '**' SUFFIX TO PANDUIT PART NUMBER F. ADDED NOTE #4 TO GENERAL NOTES E. REMOVED PRIOR NOTE(S)	10D166AI-DC

TITLE
WYR-GRID 30" WIDTH FIBERRUNNER TRAPEZE BRACKET FOR 4X4 AND 6X4 (WG30FRTB**) G
CUSTOMER DRAWING

ITEM REVISION NAME: 10D166AI/03.PRT

DATASET FILE NAME: 10D166AI_DC/03D WG30FRTB**.PRT

PANDUIT™

UNLESS OTHERWISE SPECIFIED, DIMENSIONAL TOLERANCES ARE: IN [mm]
.X ± .XXX ±
.XX ± .05 [1.3] ANGLES ±
THIRD ANGLE PROJECTION

MATERIAL: STEEL

DRAWING NUMBER: 10D166AI-DC

DRAWN BY	DATE	CHK	SCALE		SIZE
ERK	06-24-11	DWR	NONE	SHT 1 OF 1	A

D10100DA/11