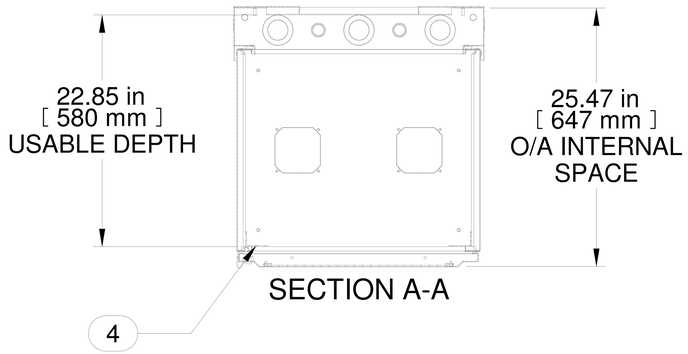


SECTION A-A

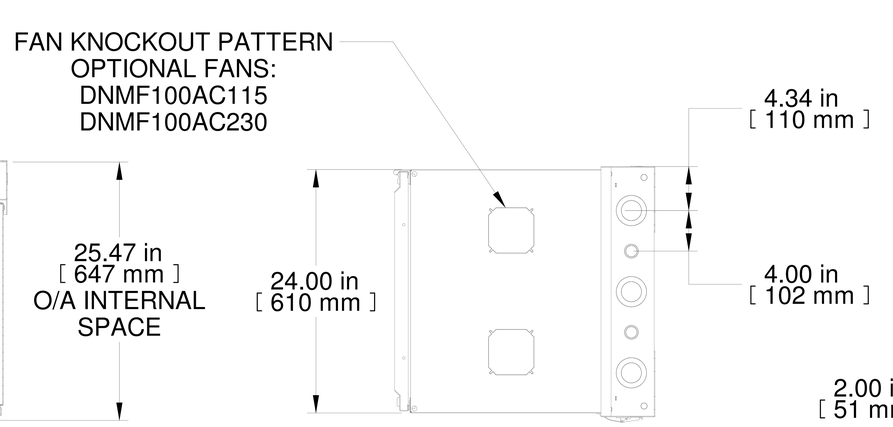


TOP VIEW

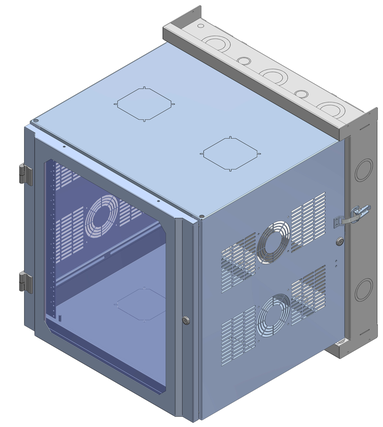

ISOMETRIC

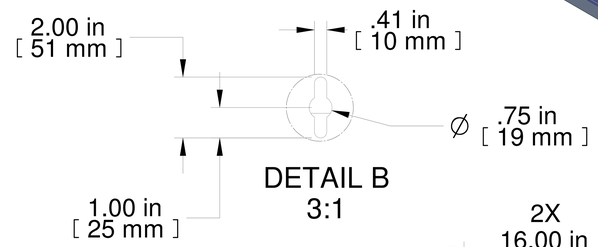


DETAIL B
3:1

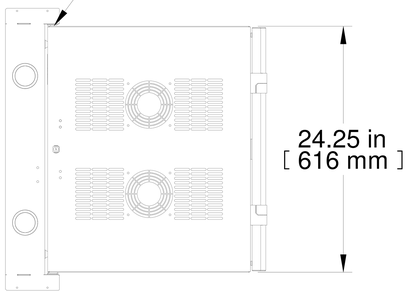


L.S. VIEW

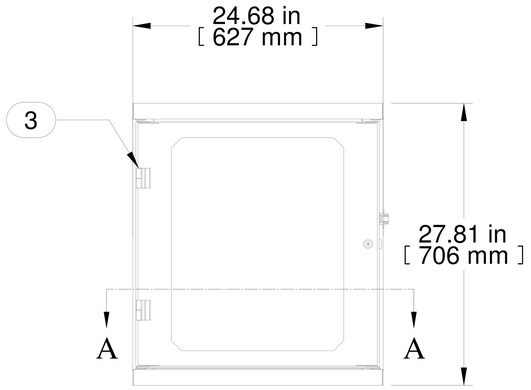


FRONT VIEW

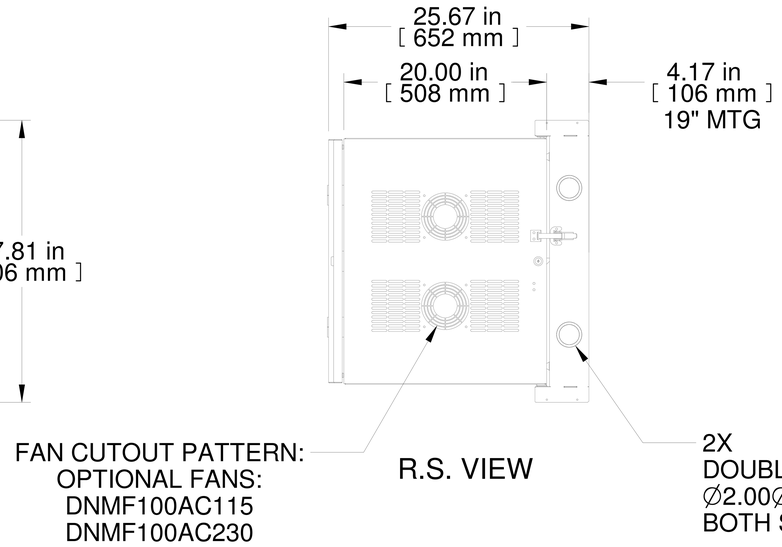


R.S. VIEW

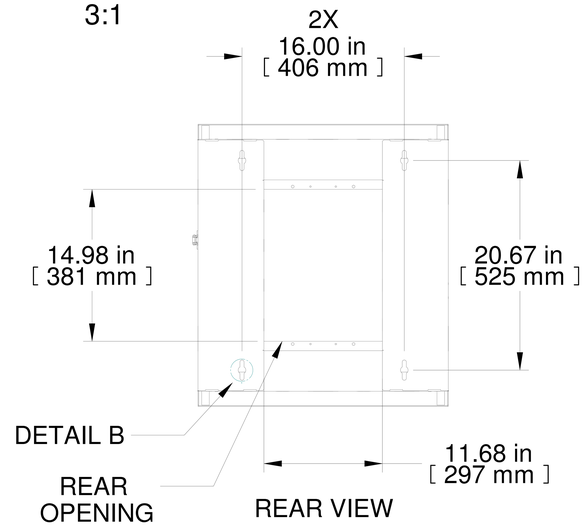


REAR VIEW

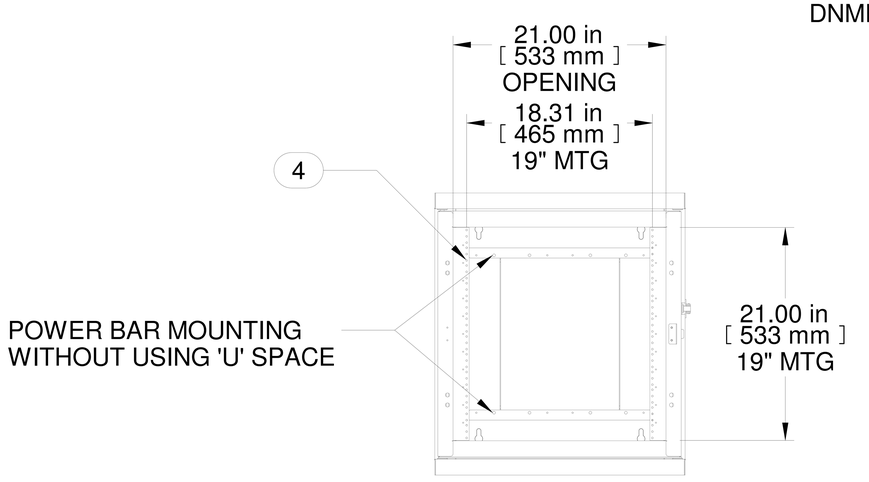


FRONT VIEW
DOOR REMOVED

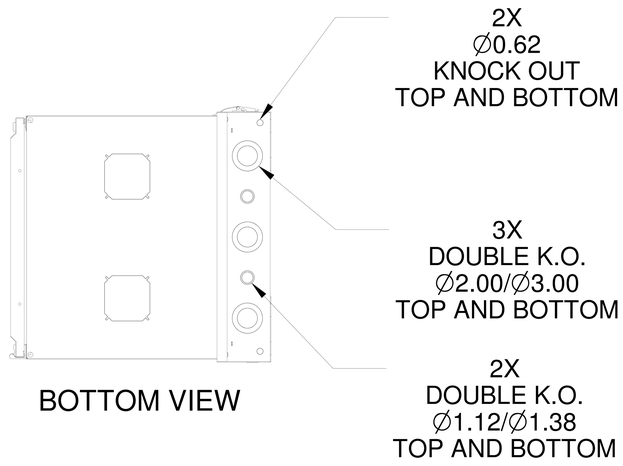


BOTTOM VIEW

| Item Number | Title | Quantity |
|---|---|---|
| 1 | HWM REAR SECTION 24W 12U | 1 |
| 2 | HWM - CENTRE SECTION | 1 |
| 3 | HWM - WINDOW DOOR ASSY | 1 |
| 4 | 19" TAPPED PANEL RAILS (PAIR) | 1 |

**PART NUMBERS**

| | |
|---|---|
| HWM2412U20WDBK | PAINTED BLANK SAND ACRYLIC WINDOW DOOR |

**NOTES**

See Hammond Website for Additional Accessories

**Français**

Pour tous les détails sur nos produits,
svp veuillez consulter notre site www.hammondmfg.com

Data subject to change without notice. Isometric drawing not to scale.
Les données sont sujettes à changement sans préavis.

HAMMOND MANUFACTURING®

www.hammondmfg.com

**PART NO. HWM2412U20WDBK**