This document was generated on 09/19/2019

PLEASE CHECK WWW.MOLEX.COM FOR LATEST PART INFORMATION

Part Number: 0350979702

Status: Active

Overview: Standard Quick-Disconnect Terminals

Description: MP-Lock Quick Disconnect with Vibration Support, Female, for 20-26 AWG (0.50-0.12mm²), Metal Strip, Tab 2.79 x 0.51mm, Pre-Tin Plated

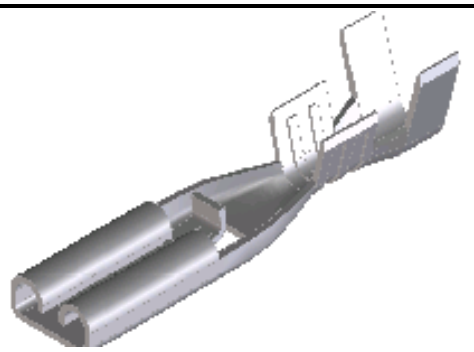

Series image - Reference only

Documents:

Drawing (PDF)
Product Specification PS-35097-001-001 (PDF)
Packaging Specification PK-35097-001-001 (PDF)
RoHS Certificate of Compliance (PDF)

Agency Certification

CSA	LR95446
UL	E92853

General

Product Family	Quick Disconnects
Series	35097
Crimp Quality Equipment	Yes
Insulated	No
Overview	Standard Quick-Disconnect Terminals
Product Name	MP-Lock
Type	Quick Disconnect
UPC	800754321167

Physical

Barrel Type	Open
Gender	Female
Glow-Wire Capable	No
Insulation	None
Lock to Mating Part	None
Material - Metal	Brass
Material - Plating Mating	Tin
Material - Plating Termination	Tin
Net Weight	0.226/g
Orientation	Straight
Packaging Type	Reel
Plating min - Mating	0.813µm
Plating min - Termination	0.813µm
Polarized to Mating Part	No
Tab Thickness	0.51mm
Tab Width	2.79mm
Temperature Range - Operating	-40° to +120°C
Termination Interface: Style	Crimp or Compression
Wire Insulation Diameter	2.80mm max.
Wire Size AWG	20, 22, 24, 26

Electrical

Voltage - Maximum	250V

Solder Process Data

Lead-freeProcess Capability	N/A

Material Info

Reference - Drawing Numbers

Packaging Specification	PK-35097-001-001
Product Specification	PS-35097-001-001
Sales Drawing	SD-35097-9X02

EU ELV
Not Relevant

EU RoHS
Compliant

China RoHS

REACH SVHC
Not Contained Per - ED/71/2019 (16 July 2019)

Halogen-Free Status
Low-Halogen

For more information, please visit Contact US

China ROHS	Green Image
ELV	Not Relevant
RoHS Phthalates	Not Contained

Search Parts in this Series
35097 Series

Use With
2.80mm Tab

Application Tooling | **FAQ**

Tooling specifications and manuals are found by selecting the products below. Crimp Height Specifications are then contained in the Application Tooling Specification document.

Global

Description	Product #
Extractor Tool for MP-Lock Quick Disconnect Receptacle Terminals	638135600
Hand Tool for .110" Crimp Terminals	638197100

This document was generated on 09/19/2019
PLEASE CHECK WWW.MOLEX.COM FOR LATEST PART INFORMATION