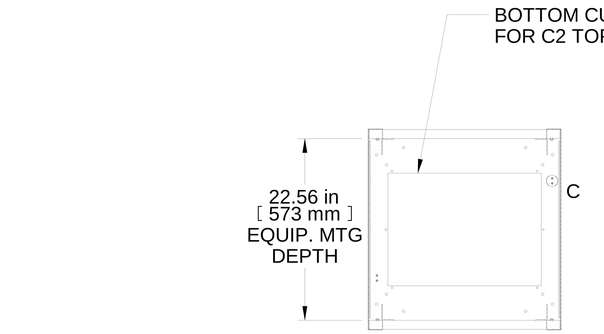


SECTION A-A

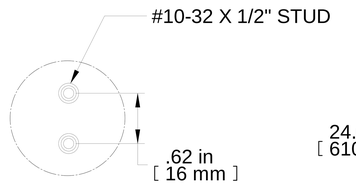


DETAIL C

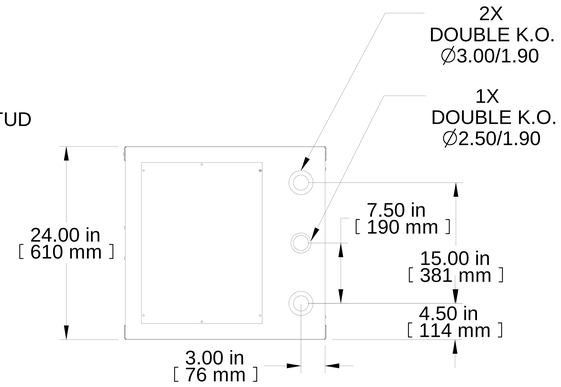


TOP VIEW

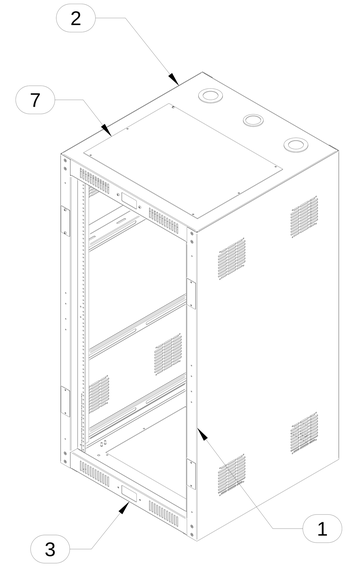


ISOMETRIC

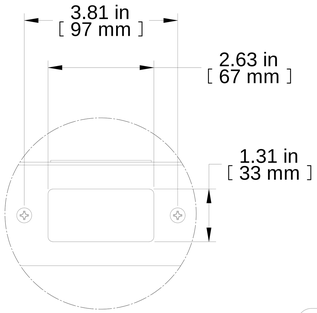


DETAIL B

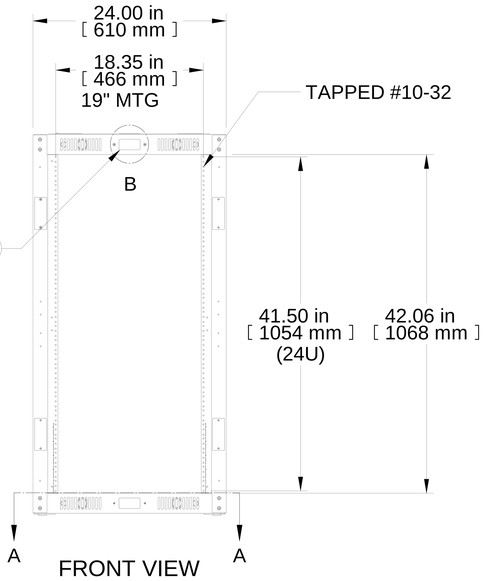


FRONT VIEW

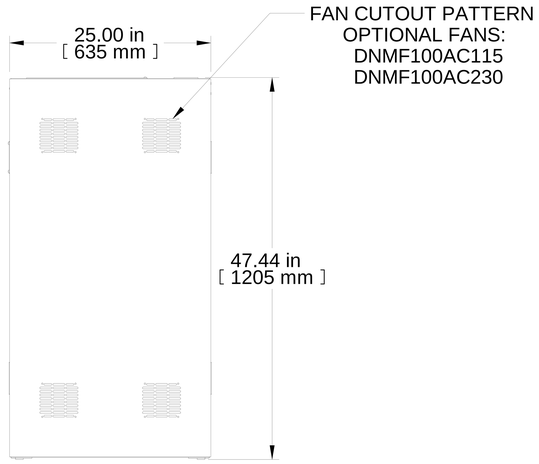


R.S. VIEW

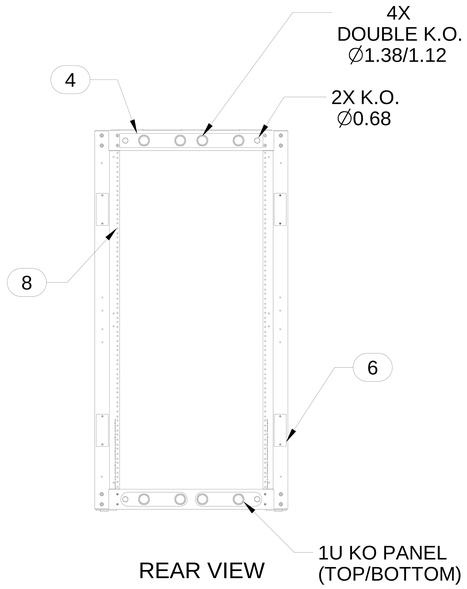


REAR VIEW

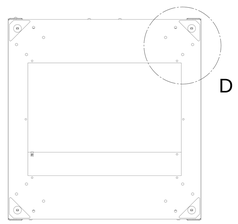


BOTTOM VIEW

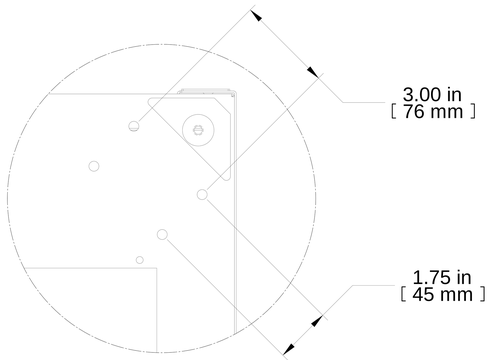


DETAIL D

| Item Number | Title | Quantity |
|---|---|---|
| 1 | RCK - SIDE PANEL | 2 |
| 2 | RCK - TOP 25"D | 1 |
| 3 | RCK - BOT 25"D | 1 |
| 4 | RCK 1U KO PANEL (PAIR) | 2 |
| 5 | RECEPTACLE COVER PLATE | 2 |
| 6 | HINGE COVER PLATE | 8 |
| 7 | SOLID TOP (C2T1923S) CONT.II | 1 |
| 8 | H1 PANEL RAIL 24U LH | 2 |

**PART NUMBERS**

| | |
|---|---|
| RCK24U25BK | PAINTED BLACK TEXTURED |

**NOTES**

Door Not Included

2 Sets of Mounting Rails

See Hammond Website for Additional Accessories

**Français**

Pour tous les détails sur nos produits,
svp veuillez consulter notre site www.hammondmfg.com

Data subject to change without notice. Isometric drawing not to scale.
Les données sont sujettes à changement sans préavis.

HAMMOND MANUFACTURING®

www.hammondmfg.com

**PART NO. RCK24U25BK**