| PASSMASS | ABMASS |
|---|---|
| | |

PROJECT NO.: | USED ON

DWG NO C 7-1579008-5

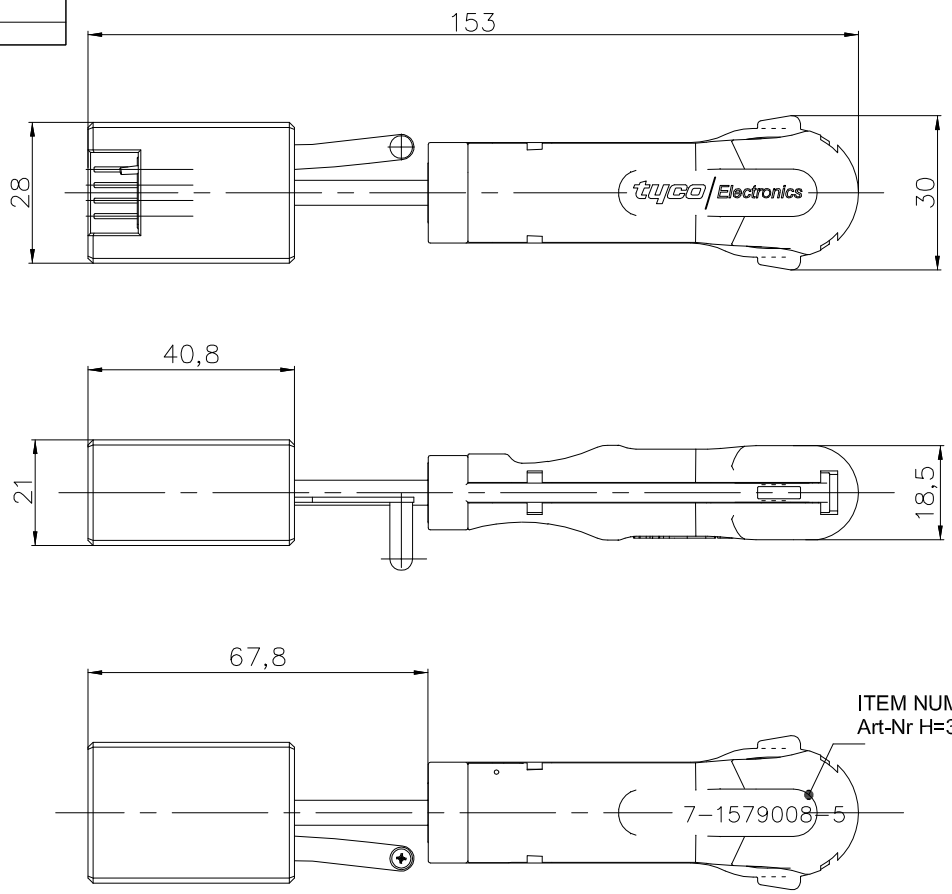


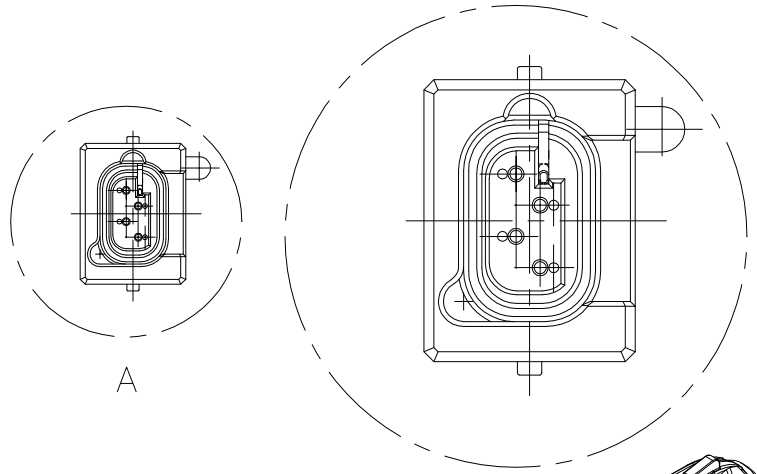


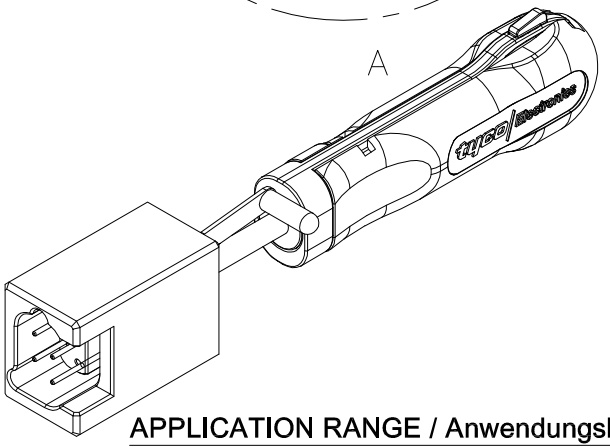

## APPLICATION RANGE / Anwendungsbereich :

**CONTACT MQS: 962886, 965908**
**HOUSING 4 Pos. MQS: 963663**


THIS DRAWING IS A CONTROLLED DOCUMENT FOR AMP INCORPORATED. IT IS SUBJECT TO CHANGE AND THE CONTROLLING ENGINEERING ORGANIZATION SHOULD BE CONTACTED FOR THE LATEST REVISION.

DIESES ZEICHNUNGSDOKUMENT WIRD DURCH AMP INCORPORATED KONTROLLIERT. AENDERUNGEN, DIE DEM TECHNISCHEN FORTSCHRITT DIENEN, SIND VORBEHALTEN. DEN JEWEILS LETZTGUELTIGEN AENDERUNGSSTAND ERFAHREN SIE AUF ANFRAGE.

THIS INFORMATION IS CONFIDENTIAL AND IS DISCLOSED TO YOU ON CONDITION THAT NO FURTHER DISCLOSURE IS MADE BY YOU TO OTHER THAN AMP PERSONNEL WITHOUT WRITTEN AUTHORIZATION FROM AMP INCORPORATED, D - 63225 LANGEN


FREIMASSTOLERANZEN NACH DIN 7168 (WERTE IN mm)
1) ABWEICHEND VON DIN 7168 2) LÄNGE DES KÜRZEREN SCHENKELS

| NENNMASS- | | ÜBER | 0.5 | 3 | 6 | 30 | 120 | 400 |
|---|---|---|---|---|---|---|---|---|
| BEREICH 1) | | BIS | 3 | 6 | 30 | 120 | 400 | 1000 |
| ABMASSE | LÄNGEN- | ~~FEIN~~ | ~~±0.05~~ | ~~±0.05~~ | ~~±0.1~~ | ~~±0.15~~ | ~~±0.2~~ | ~~±0.3~~ |
| | MASSE | MITTEL | ±0.1 | ±0.1 | ±0.2 | ±0.3 | ±0.5 | ±0.8 |
| | RADIEN U. FASEN | | ±0.2 | ±0.5 | ±1 | ±2 | ±4 | ±4 |
| WINKELABMASSE 1) 2) | | | ±1° | ±1° | ±30' | ±20' | ±10' | ±5' |

GENERAL TOLERANCES ACC. TO DIN 7168 (VALUES IN mm)
1) DEVIATING FROM DIN 7168 2) LENGHT OF SHORT ANGLE SIDE

TEIL IM BEREICH X__ MIT PN; STRICH-NR. (-1 WIE GEZ.), REVISION-STAND UND LIEFERANTENSYMBOL GEKENNZEICHNET

PART TO BE MARKED WITH PN; DASH NO. (-1 AS SHOWN), REV. STATUS AND VENDORS MARK IN AREA X__

OBERFLÄCHENVERGLEICHSTABELLE

| DIN3141 R3 | ∿ | ▽ | ▽▽ | ▽▽▽ | ▽▽▽▽ | BOHRG. OHNE ANGABE |
|---|---|---|---|---|---|---|
| $R_a$ in µm DIN ISO 1302 | roh | 6.3 | 1.6 | 0.4 | 0.1 | 12.5 |

ALLE UNBEMASSTE KANTEN 0.2x45° ENTGRATET
REMOVE BURRS, BREAK SHARP EDGES 0.2x45°
HOLE NOT SPEC.

LOC AI
DIST –

| P | LTR | REVISION RECORD | DATE | DWN | APVD |
|---|---|---|---|---|---|
| | – | – | – | – | – |
| | – | – | – | – | – |
| | – | – | – | – | – |
| | – | – | – | – | – |

FINISH

DIMENSIONS: mm

TOLERANCES UNLESS OTHERWISE SPECIFIED:
n. ISO 8015
n. ISO 2768 - mH -E
n. DIN 16901 - 140
0 PLC ±-
1 PLC ±-
2 PLC ±-
3 PLC ±-
4 PLC ±-

ANGLES± -
SURFACE TEXTURE -

Gewicht / Weight 0,000kg

| | | |
|---|---|---|
| DWN | S. Samstag | 04.06.2008 |
| CHK | G. Stegmayer | 04.06.2008 |
| APVD | G. Stegmayer | 04.06.2008 |

MATERIAL | HEAT TREAT

Tyco Electronics
Tyco Electronics AMP GmbH
64625 Bensheim (Germany)

NAME EXTRACTION TPPL FOR MQS 4 POS OPEN FIRST AND SECONDARY LOCK
Entriegelungswerkzeug für MQS 4 pol. öffnen erste und zweite Kontaktsicherung

| SCALE | SIZE | DRAWING NO | SHEET | REV |
|---|---|---|---|---|
| 1:1 | A3 | C 7-1579008-5 | 1 OF 1 | A |

AMP 3306-7 REV 23FEB95

8 7 6 5 4 3 2 1