THIS DRAWING IS UNPUBLISHED. RELEASED FOR PUBLICATION -,- .
© COPYRIGHT - BY TYCO ELECTRONICS CORPORATION. ALL RIGHTS RESERVED.

LOC	DIST
GP	00

REVISIONS

P	LTR	DESCRIPTION	DATE	DWN	APVD
	E	REVISED PER ECO-11-003735	16MAR2011	CJV	SLB

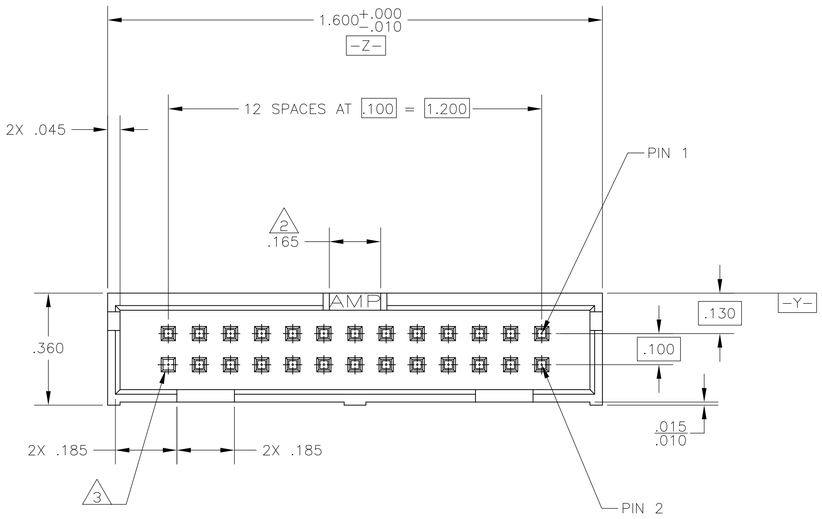

1. DOUBLE BAR POLARIZATION SLOTS.
2. CENTER POLARIZATION SLOT.
3. POST OMITTED IN POSITION NO. 26.
4. DATUMS U AND V TO BE ESTABLISHED BY THE CUSTOMER.
5. HOUSING: GLASS FILLED NYLON OR PBT, BLACK, UL 94V-0 RATED.
   POSTS: BRASS.
6. POSTS: GOLD FLASH OVER PALLADIUM-NICKEL PLATE, .000015 MIN TOTAL ON THE MATING SURFACES, .000100 MIN TIN PLATE ON THE SOLDER-TAILS, .000050 MIN NICKEL UNDERPLATE ON THE ENTIRE POST.
   -OR-
   .000015 MIN GOLD PLATE ON THE MATING SURFACES, .000100 MIN TIN PLATE ON THE SOLDER-TAILS, .000050 MIN NICKEL UNDERPLATE ON THE ENTIRE POST.

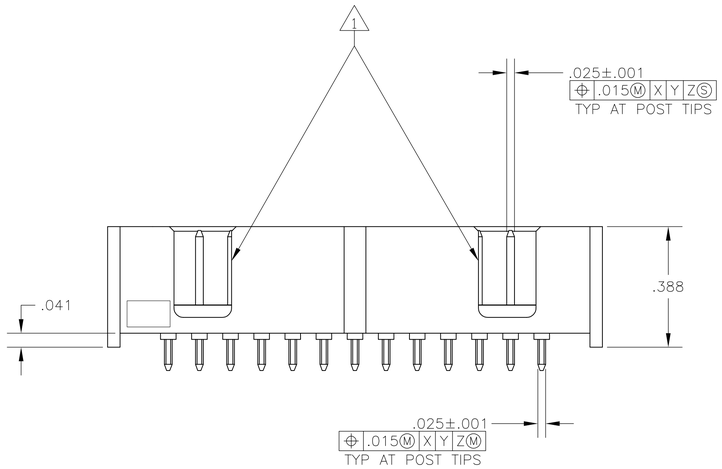

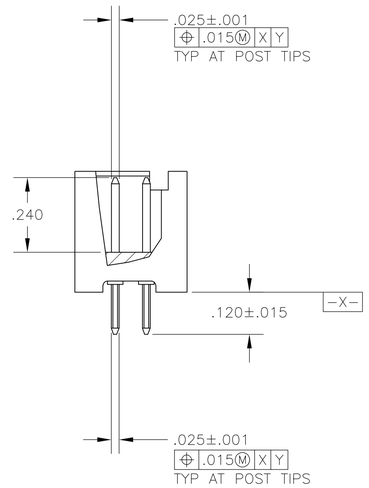

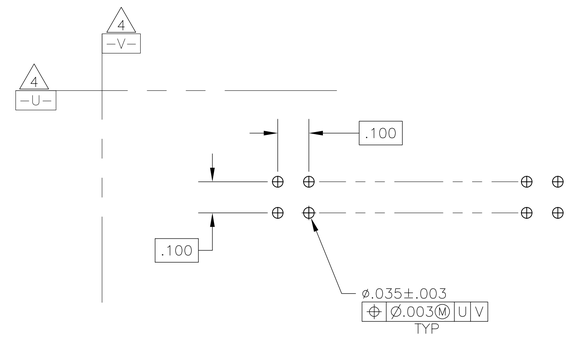

RECOMMENDED PCB LAYOUT

1888196-1
PART NUMBER

THIS DRAWING IS A CONTROLLED DOCUMENT.

DIMENSIONS: INCHES

TOLERANCES UNLESS OTHERWISE SPECIFIED:
0 PLC ± -
1 PLC ± -
2 PLC ± -
3 PLC ± .005
4 PLC ± -
ANGLES ± -

MATERIAL 5
FINISH 6

DWN C. LAUBACH 16 DEC 05
CHK S. BOLASH 16 DEC 05
APVD M. WALMSLEY 16 DEC 05
PRODUCT SPEC 108-40018
APPLICATION SPEC —
WEIGHT —

Tyco Electronics
Tyco Electronics Corporation
Harrisburg, PA 17105-3608

NAME HEADER ASSY, 26 POSITION, VERTICAL, LOW PROFILE, AMP-LATCH

SIZE	CAGE CODE	DRAWING NO	RESTRICTED TO
A1	00779	C-1888196	—

CUSTOMER DRAWING | SCALE 4:1 | SHEET 1 OF 1 | REV E