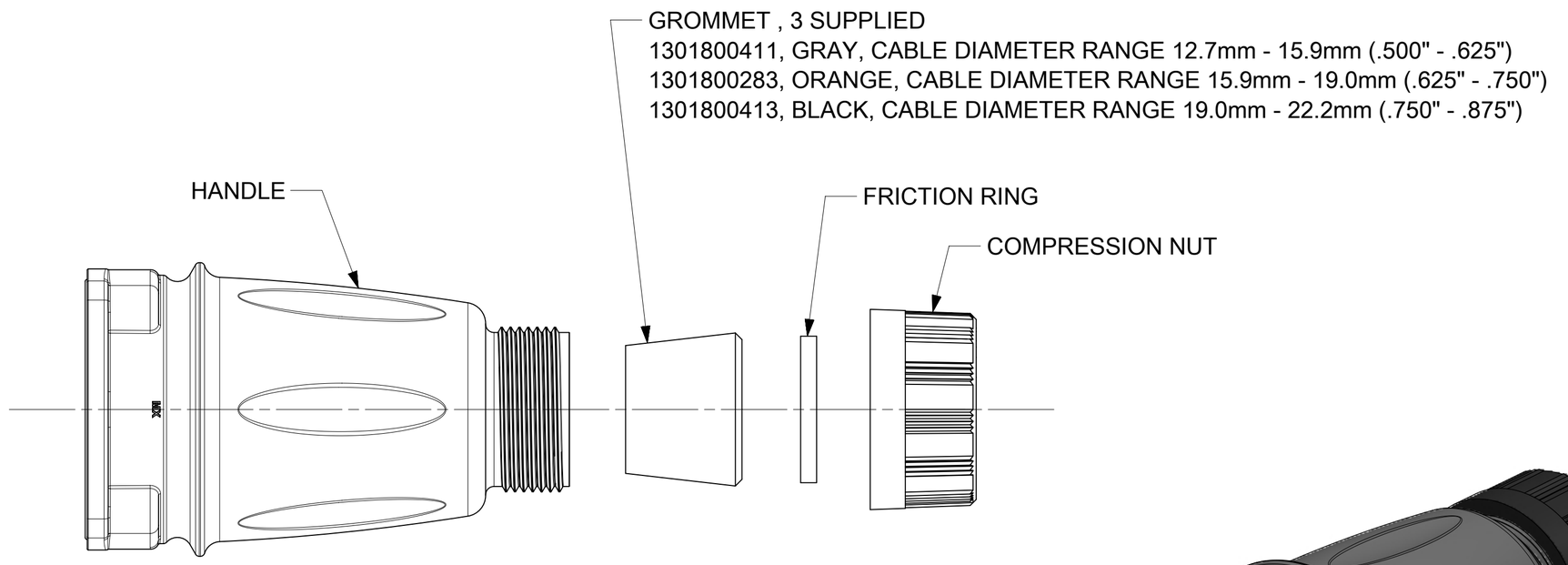


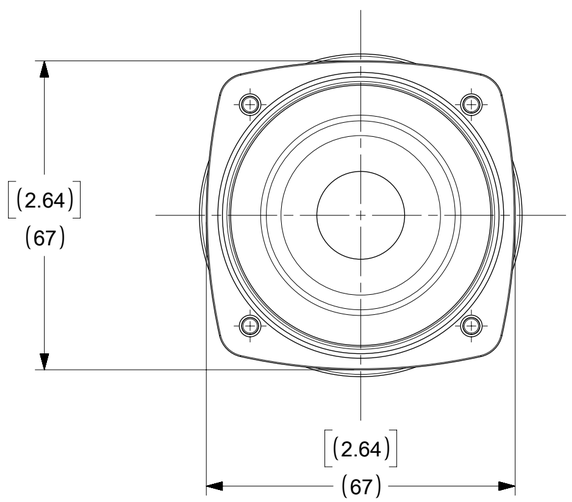


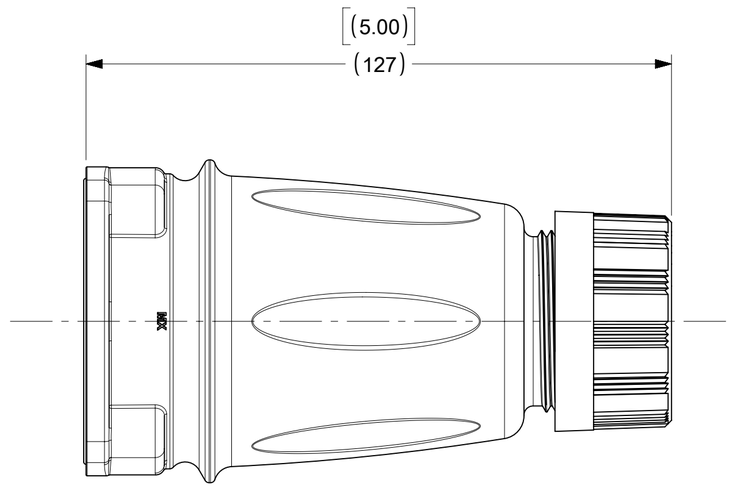

NOTES:

1. MATERIAL:
   HANDLE - GREY PBT
   GROMMET - RUBBER
   FRICTION RING - NATURAL POLYETHYLENE
   COMPRESSION NUT - BLACK PBT
   SELF TAPPING SCREWS (TO ASSEMBLE DEVICE, NOT SHOWN) - STAINLESS STEEL

2. OPERATING TEMPERATURE RANGE -40°C (-40°F) TO 60°C (140°F).

3. THIS DRAWING REPLACES SD-112219-600.

| QUALITY SYMBOLS | |
|---|---|
| FA | = 0 |
| FC | = 0 |
| FD | = 0 |
| ▼ | = 0 |
| C | = 0 |
| ☒ | = 0 |
| ■ | = 0 |
| C | = 0 |

THIS DRAWING CONTAINS INFORMATION THAT IS PROPRIETARY TO MOLEX ELECTRONIC TECHNOLOGIES, LLC AND SHOULD NOT BE USED WITHOUT WRITTEN PERMISSION

REDRAWN IN NX
EC NO: 176476 2018/05/09
DRWN: VBASUTHKARP 2018/05/10
CHK'D: BRUPERT 2018/05/10
APPR: BRUPERT

B1 REV

GENERAL TOLERANCES (UNLESS SPECIFIED)

| | MM | INCH |
|---|---|---|
| 4 PLACES | ± | ± |
| 3 PLACES | ± | ± 0.005 |
| 2 PLACES | ± 0.13 | ± 0.010 |
| 1 PLACES | ± 0.25 | ± 0.020 |
| 0 PLACES | ± | ± |

ANGULAR TOL ± 0.5°

DRAFT WHERE APPLICABLE MUST REMAIN WITHIN DIMENSIONS

| DIMENSION UNITS | SCALE |
|---|---|
| MM[INCH] | 1:1 |
| DRWN BY: KJ | DATE: 5/2/2017 |
| CHK'D BY: BR | DATE: 5/2/2017 |
| APPR BY: JM | DATE: 5/2/2017 |
| DRAWING SIZE: C | THIRD ANGLE PROJECTION |

molex®

ArcArrest™
MAX-LOC™ HANDLE W/O DRAWPLATE

PRODUCT CUSTOMER DRAWING

| SERIES | MATERIAL NUMBER | CUSTOMER |
|---|---|---|
| 112219 | 1122196000 | GENERAL MARKET |

| DOCUMENT NUMBER | DOC TYPE | DOC PART | SHEET NUMBER |
|---|---|---|---|
| 1122196000 | PSD | 000 | 1 OF 1 |

| RELEASE STATUS | P1 | RELEASE DATE | 2018/05/10 16:43:22 |
|---|---|---|---|

FORMAT: Eng-tega-master-tb-prod-C
REVISION: C
DATE: 2017/02/06