MOLEX PN	ENGINEERING No	LENGTH
1200680358	884A30B55M003	0.3M

CABLE LENGTH TOLERANCES		
OVER	INCLUDING	TOLERANCES
0	305mm	+19mm -0
305mm	915mm	+45mm -0
915mm	1830mm	+56mm -0
1830mm	3660mm	+89mm -0
3660mm	7320mm	+165mm -0
7320mm	14640mm	+317mm -0
14640mm	30500mm	+610mm -0
30500mm	>	+2% of finished length

884A30B55M003

LENGTH
M001 = .1 METERS
M010 = 1.0 METERS
M100 = 10 METERS

PART NUMBER MATRIX

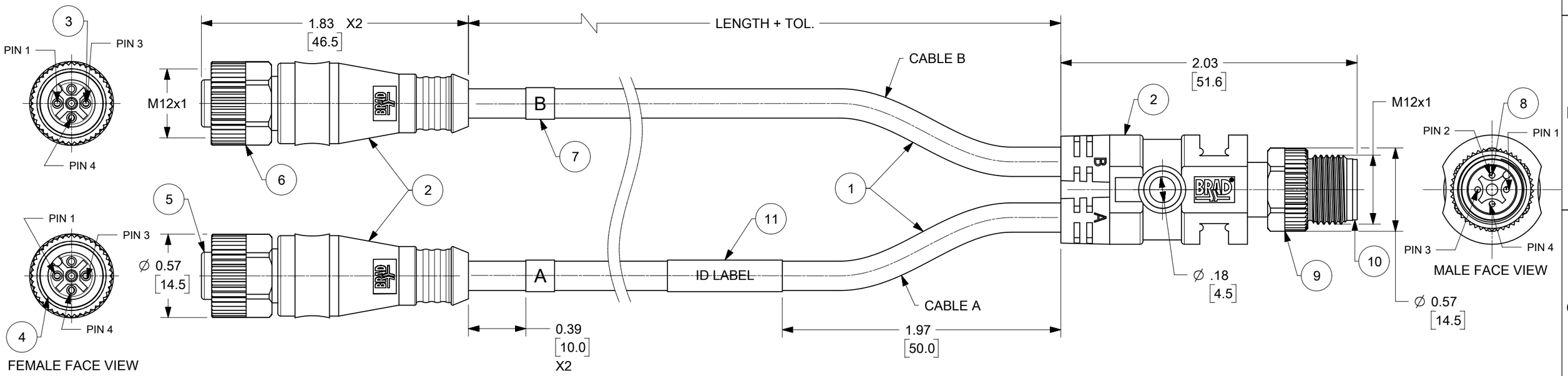

NOTES:
1. MATERIAL: AS NOTED
2. FINISH: AS NOTED
3. ELECTRICAL:
   VOLTAGE: 250V
   CURRENT: 4A
4. PROTECTION: IP67 (WHEN MATED)
5. STATIC OPERATING TEMP: -40°TO +90°C
   DYNAMIC OPERATING TEMP: -40°TO +80°C
6. ALL DIMS ARE FOR REFERENCE UNLESS NOTED OTHERWISE OR TOLERANCED.

ITEM	DESCRIPTION	MATERIAL	FINISH/COLOR
11	ID LABEL	VINYL	YELLOW
10	INSERT M12 MALE 4P	PUR	BLACK
9	NUT M12 MALE	BRASS	NICKEL
8	PIN CONTACT	BRASS	GOLD OVER NICKEL
7	SMALL LABEL	VINLY	WHITE
6	NUT M12 FEMALE	BRASS	NICKEL
5	M12 INSERT 3P FEMALE	PUR	BLACK
4	GASKET O-RING	FPM	RED
3	SOCKET CONTACT	BRASS	GOLD OVER NICKEL
2	OVERMOLD	TPU	BLACK
1	WSOR CABLE 3X0.34mm²	TPU	YELLOW

DOCUMENT STATUS	P1	RELEASE DATE	2019/10/11 20:05:00

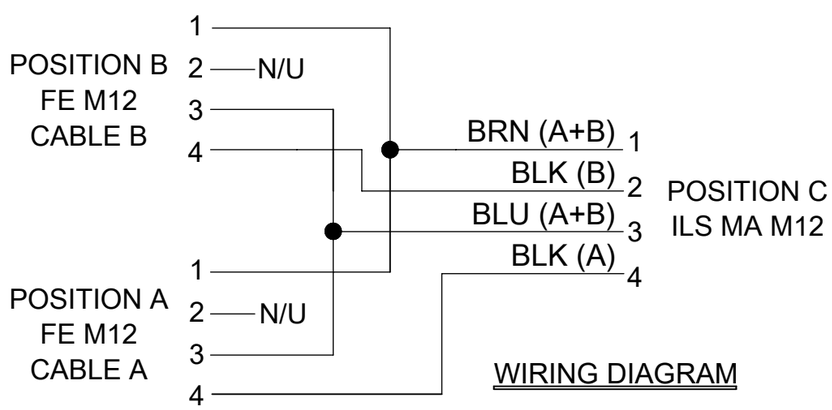

WIRING DIAGRAM

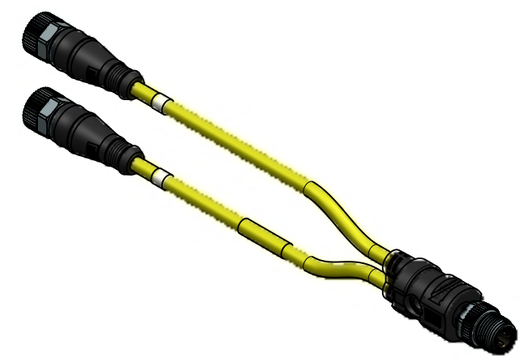

THIS DRAWING CONTAINS INFORMATION THAT IS PROPRIETARY TO MOLEX ELECTRONIC TECHNOLOGIES, LLC AND SHOULD NOT BE USED WITHOUT WRITTEN PERMISSION

SYMBOLS: E = 0, F = 0, G = 0, S = 0, ▼ = 0, C = 0, ☒ = 0, ■ = 0, V = 0

DIMENSION UNITS: HYBRID | SCALE: 3:2
GENERAL TOLERANCES (UNLESS SPECIFIED)
ANGULAR TOL ± °
4 PLACES ±
3 PLACES ±
2 PLACES ±
1 PLACE ±
0 PLACES ±
DRAFT WHERE APPLICABLE MUST REMAIN WITHIN DIMENSIONS

CURRENT REV DESC: RELEASE

EC NO: 625236
DRWN: MZIELINSKI 2019/10/07
CHK'D: CCHRASTKA 2019/10/07
APPR: BWOODMAN 2019/10/11

INITIAL REVISION:
DRWN: MZIELINSKI 2019/10/07
APPR: BWOODMAN 2019/10/11

THIRD ANGLE PROJECTION | DRAWING: A3-SIZE | SERIES: 120068

molex

IN-LINE SPLITTE 4P MM/ST 2XFE/ST
WSOR YELLOW

PRODUCT CUSTOMER DRAWING

DOCUMENT NUMBER	DOC TYPE	DOC PART	REVISION
1200680358	PSD	000	A

MATERIAL NUMBER	CUSTOMER	SHEET NUMBER
SEE PART LIST/SHEET 2	GENERAL MARKET	1 OF 1

FORMAT: master-tb-prod-A3
REVISION: H
DATE: 2018/01/18