THIS DRAWING CONTAINS INFORMATION THAT IS PROPRIETARY TO J.S.T. AND SHALL NOT BE USED OR SHOWN WITHOUT WRITTEN PERMISSION.

| ITEM | CONNECTOR PART NO. | DESCRIPTION | IPI CHECK | EOR CHECK | Applicable Tooling |
|---|---|---|---|---|---|
| 1 | SRSF-82T-250A | RSF CONTACT, BRASS TIN-PLATED | | | APPLICATOR |
| 2 | UL1015, 16 AWG | BLACK (X2) | | | |

SUGGESTED MATING TAB
NO SCALE

| | WITHOUT STABILIZER | WITH STABILIZER |
|---|---|---|
| DIM. "A" | 2.20 [0.087] MIN. | 4.20±0.15 [0.165±0.006] |
| DIM. "B" | 7.40 [0.291] MIN. | 7.98 [0.314] MIN. |
| DIM. "C" | 5.90 [0.232] MAX. | (7.6) |

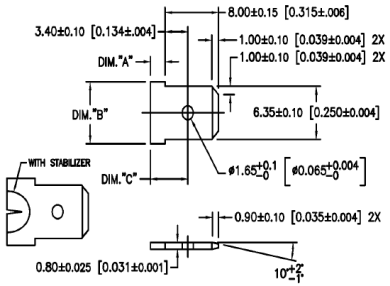


MATING TAB NOTES:
4. MAT'L: BRASS.
FINISH: SUGGESTED NO PLATING.

## Applicable Housings

| NO. OF CIRCUITS | KEYLESS HOUSING PART NO. |
|---|---|
| 2 | RSFP-2V-00 |
| 3 | RSFP-3V-00 |
| 4 | RSFP-4V-00 |
| 5 | RSFP-5V-00 |
| 6 | RSFP-6V-00 |
| 7 | RSFP-7V-00 |
| 8 | RSFP-8V-00 |
| 9 | RSFP-9V-00 |
| 10 | RSFP-10V-00 |
| 11 | RSFP-11V-00 |
| 12 | RSFP-12V-00 |

Other housings and configurations are available. Please contact JST for details.

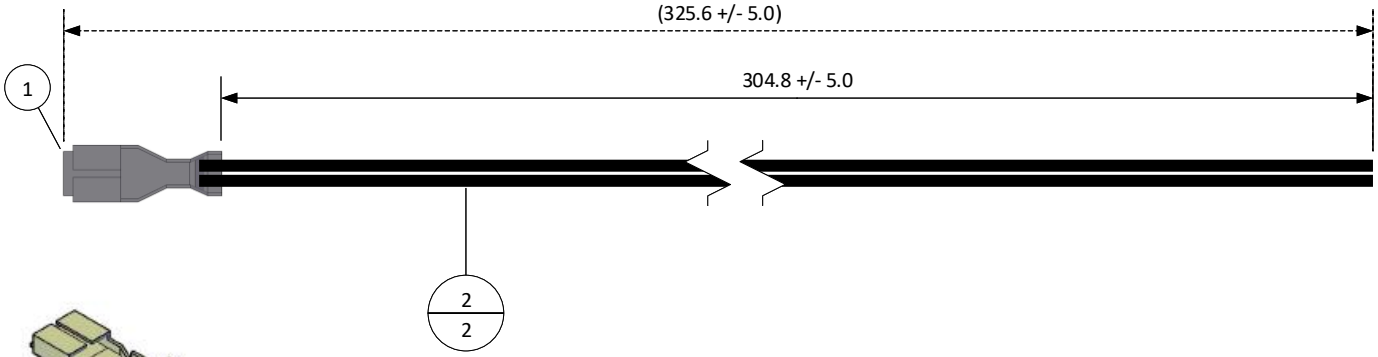


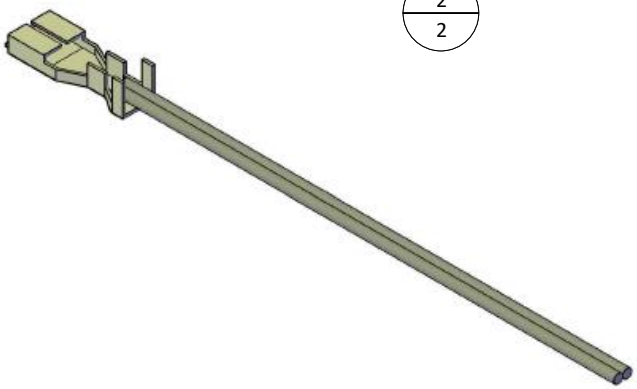

| SCALE | CUSTOMER NAME | CUSTOMER PART NO. |
|---|---|---|
| 1: 1 | | |
| DIMENSIONS: All dimensions are in MM with a tolerance of +/- 3.0 unless otherwise specified. | DESCRIPTION: 12" LIF, POS LOCK, .250, SINGLE-END, DOUBLE-CRIMP LEADS, BRASS TIN-PLATED, F-F | |
| DRAWN BY: STEVEN PILKINGTON | ASSEMBLY PART NO.: ASRSF2X16K305B | |
| CHECKED BY: JUSTIN BAKER | DRAWING NO. & REVISION: GAM-156 | REVISED: 3/16/2016 |

| REV. | DESCRIPTION | DATE | BY |
|---|---|---|---|
| | | | |