CUSTOMER: CISCO

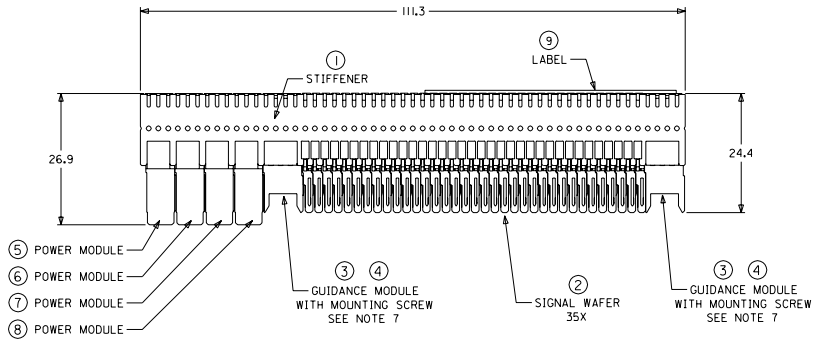

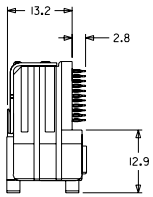

NOTES: (UNLESS OTHERWISE SPECIFIED)

1. MATERIALS: HOUSING - LIQUID CRYSTAL POLYMER (LCP), GLASS-FILLED, UL94V-0, BLACK. TERMINALS - COPPER ALLOY. STIFFENER - STAINLESS STEEL.
2. FINISH: SELECTIVE GOLD (Au) IN CONTACT AREA, 0.00076mm MINIMUM THICKNESS; SELECTIVE TIN/LEAD (Sn/Pb) ON PCB TAILS, 0.00038 - 0.00152 mm THICK; NICKEL (Ni) OVERALL.
3. REFER TO MOLEX PRODUCT SPECIFICATION PS-74031-999 FOR PERFORMANCE SPECIFICATIONS.
4. REFER TO MOLEX DOCUMENT SD-74031-002 FOR ADDITIONAL DETAIL ON THE SIGNAL WAFER.
5. REFER TO MOLEX DOCUMENT SD-74037-005 FOR ADDITIONAL DETAIL ON THE GUIDANCE MODULE.
6. REFER TO MOLEX DOCUMENT SD-74026-001 FOR ADDITIONAL DETAIL ON THE POWER MODULE.
7. MOUNTING SCREWS WILL BE BAGGED WITH EACH CONNECTOR.
8. PARTS ARE PACKAGED IN TUBES PER PK-70873-5040.

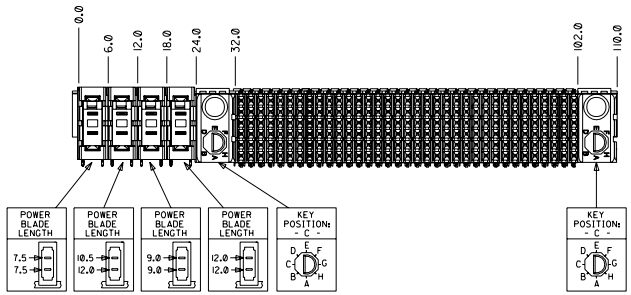

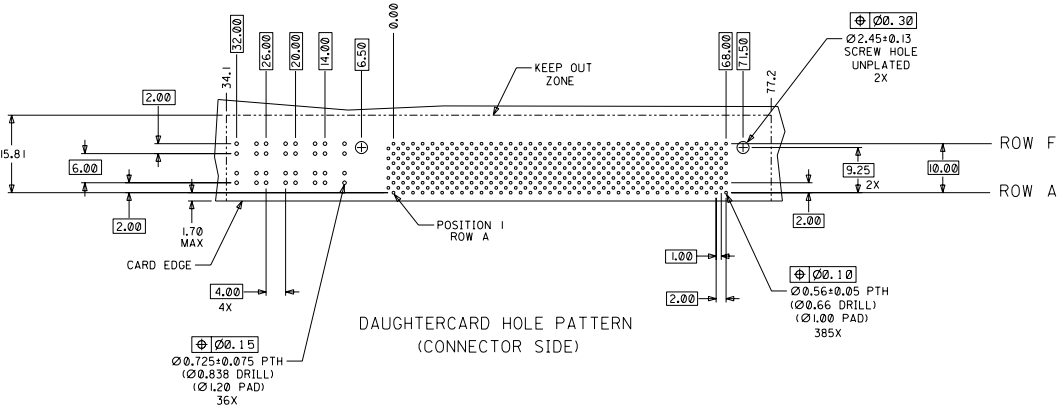

DAUGHTERCARD HOLE PATTERN
(CONNECTOR SIDE)

ITEM	PART NUMBER	DESCRIPTION	QTY
1	74036-0111	STIFFENER	1
2	74031-0001	SIGNAL WAFER	35
3	74037-6003	POLARIZING/GUIDE MODULE	2
4	73726-0000	GUIDE MODULE MNTG SCREW	2
5	74026-6110	POWER MODULE	1
6	74026-6430	POWER MODULE	1
7	74026-6220	POWER MODULE	1
8	74026-6440	POWER MODULE	1
9	73728-0000	CUSTOM LABEL	1

CHANGED CUSTOMER
EC NO. UDT2002-0268
DRWN L. MOSLEY 01/08/14
CH'K: LAURX 01/08/14
APPR: BIXLER 01/08/14
DESCRIPTION
A1
REV

QUALITY SYMBOLS
MAJOR = 0
CRITICAL C = 0

GENERAL TOLERANCES: (UNLESS SPECIFIED)

	mm	INCH
4 PLACES	±0. --	±. --
3 PLACES	±0. --	±. --
2 PLACES	±0. --	±. --
1 PLACE	±0. --	±. --
ANGULAR: ± 2°		

DRAFT WHERE APPLICABLE MUST REMAIN WITHIN DIMENSIONS

SCALE 2 : 1
DESIGN UNITS ☒ mm ☐ INCH
THIRD ANGLE PROJECTION
DIMENSIONS: ☐ mm/INCH ☐ INCH/mm ☒ mm ONLY
SHT REV
REVISE ON CAD ONLY

DRAWN BY & DATE LAURX 99/09/27
CHECKED BY & DATE ELO 99/09/28
APPROVED BY & DATE BIXLER 99/09/28

TITLE: 6 ROW VHDM DAUGHTERCARD ASSEMBLY SALES DRAWING

MOLEX INCORPORATED

CAD FILENAME SD-74030-033
MATERIAL NO. 74030-0033
DRAWING NO. SD-74030-033
SHEET NO. 1 OF 1
SIZE D

THIS DRAWING CONTAINS INFORMATION THAT IS PROPRIETARY TO MOLEX INCORPORATED AND SHOULD NOT BE USED WITHOUT WRITTEN PERMISSION.