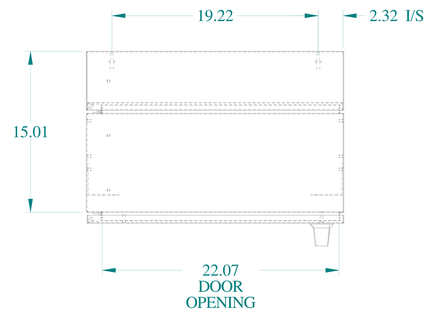

TOP VIEW

DETAIL Z
TYP

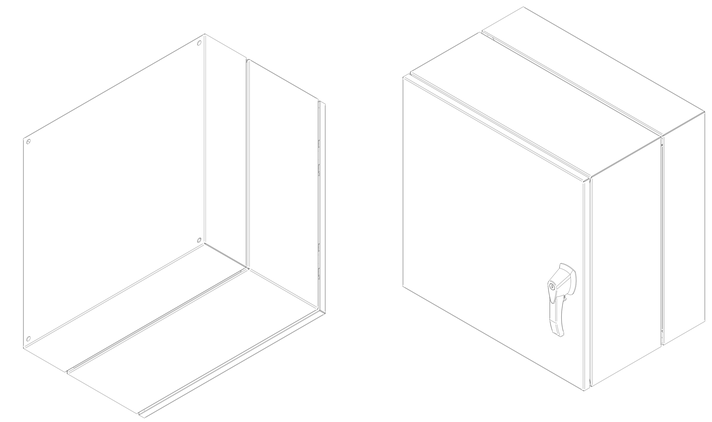

ISOMETRIC VIEWS

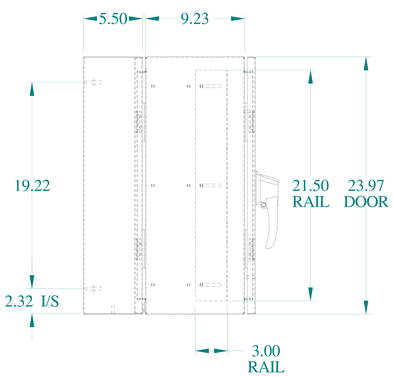

SIDE VIEW

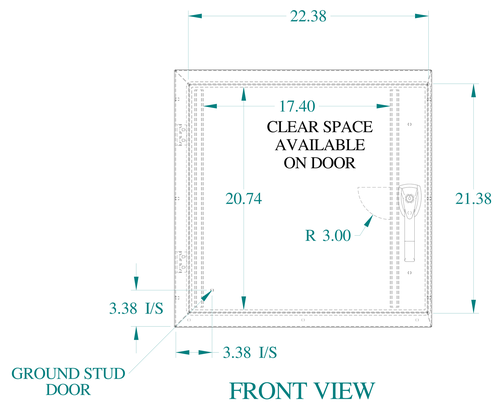

FRONT VIEW

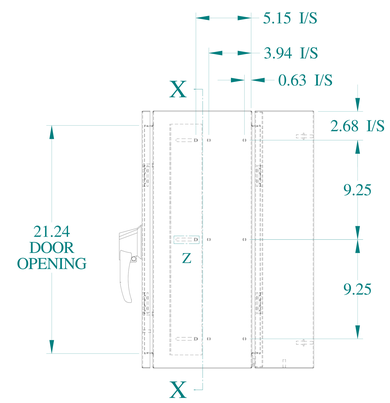

SIDE VIEW

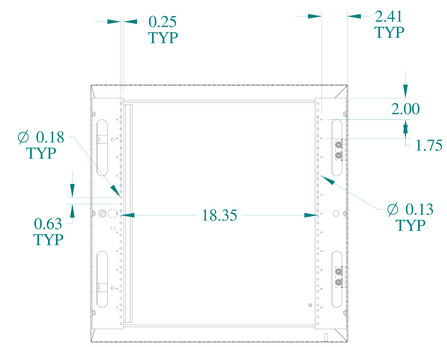

SECTION X-X

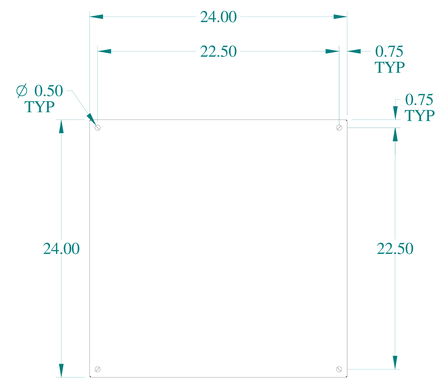

BACK VIEW

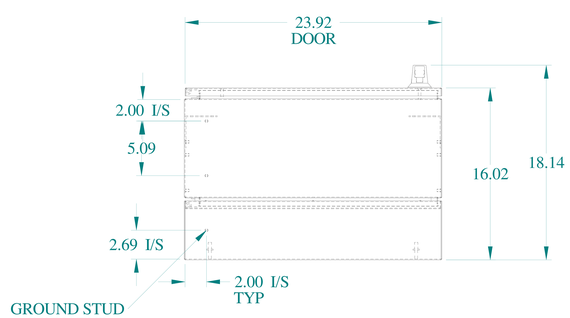

BOTTOM VIEW

HAMMOND MANUFACTURING®

www.hammondmfg.com

Data subject to change without notice.

Part # : EN4DH242415LG	Date : Mar. 25, 2019

Link:www.hammfg.com/EN4DH242415LG