ITEM	PART#	DESCRIPTION	QTY	UOM
A	2059792031	M-ONE 2.0 RECHSG 3CKT BK	1	PC
B	561349001	2.0 WTB CONN CRIMP REC AWG#22-#24 CHAIN	3	PC
C	--	PAPER PRINTED PAPER WHITE	1	PC

FROM	TO	DESCRIPTION	COLOR
A1	--	1X22AWG DISC PVC BK UL1569 HOOKUP	BLACK
A2	--	1X22AWG DISC PVC BK UL1569 HOOKUP	BLACK
A3	--	1X22AWG DISC PVC BK UL1569 HOOKUP	BLACK

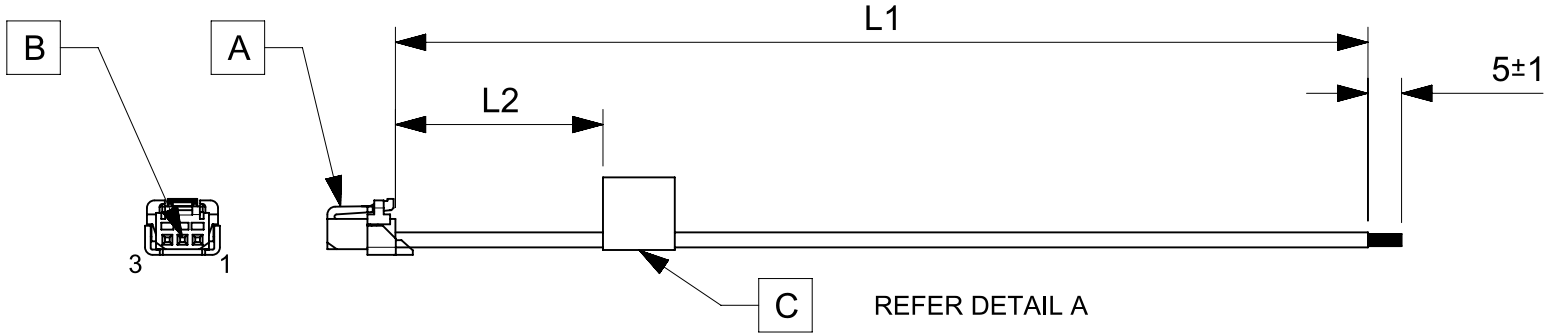

TABLE			
PART NUMBER	L1	L2 (REF)	TITLE
2196531030	50±3	15	Micro-One ISL R-S 3ckt 50mm disc Sn
2196531031	100±3	15	Micro-One ISL R-S 3ckt 100mm disc Sn
2196531032	150±4	15	Micro-One ISL R-S 3ckt 150mm disc Sn
2196531033	300±4	15	Micro-One ISL R-S 3ckt 300mm disc Sn
2196531034	600±6	15	Micro-One ISL R-S 3ckt 600mm disc Sn

NOTES
1. Connector view shown is from mating side.
2. Label text must be 2mm max. in height with Arial font.
3. Label must be wrapped in Flag type on a single cable.
4. Free ends must be stripped, twisted & tinned. The length of tinning is 5±1mm. Tinning Dia must be 0.9 mm Max.

MOLEX P/N
MOLEX
BATCH WK/YR

DETAIL A

REVISION			
DATE	REV	DESCRIPTION	CHANGER
2021/12/27	A	INITIAL RELEASE	SAIKIG

THIS DRAWING CONTAINS INFORMATION THAT IS PROPRIETARY TO MOLEX ELECTRONIC TECHNOLOGIES, LLC AND SHOULD NOT BE USED WITHOUT WRITTEN PERMISSION

FUNCTIONAL SYMBOLS: FA = 0, FC = 0, FP = 0
DIVISIONAL SYMBOLS

DIMENSION UNITS	SCALE
mm	NTS

GENERAL TOLERANCES (UNLESS SPECIFIED)

ANGULAR TOL	± °
4 PLACES	±
3 PLACES	±
2 PLACES	±
1 PLACE	±
0 PLACES	±

DRAFT WHERE APPLICABLE MUST REMAIN WITHIN DIMENSIONS

CURRENT REV DESC:

EC NO: 690621
DRWN: SAIKIG 2021/12/25
CHK'D: MNARAYAN01 2022/01/11
APPR: MNARAYAN01 2022/01/11

INITIAL REVISION:
DRWN: SAIKIG 2021/12/25
APPR: MNARAYAN01 2022/01/11

molex

SEE TABLE

PRODUCT CUSTOMER DRAWING

DOCUMENT NUMBER	DOC TYPE	DOC PART	REVISION
2196531030	PSD	000	A

THIRD ANGLE PROJECTION	DRAWING	SERIES	MATERIAL NUMBER	CUSTOMER	SHEET NUMBER
	A4-SIZE	219653	SEE TABLE	GENERAL MARKET	1 OF 1

DOCUMENT STATUS	P1	RELEASE DATE	2022/01/11 06:50:42

FORMAT: master-tb-prod-A4
REVISION: J
DATE: 2020/01/14