NOTES: UNLESS OTHERWISE SPECIFIED
1. ALL DIMS FOR REFERENCE ONLY
2. DIMS IN [ ] ARE MILLIMETERS

SOHO DC MOTOR
7E54100B-45035-50Y
12 VDC: 2300 RPM NO LOAD
24 VDC: 4700 RPM NO LOAD

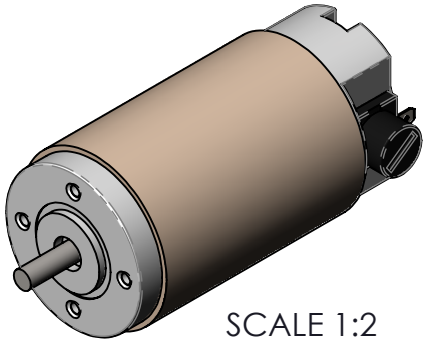

SCALE 1:2

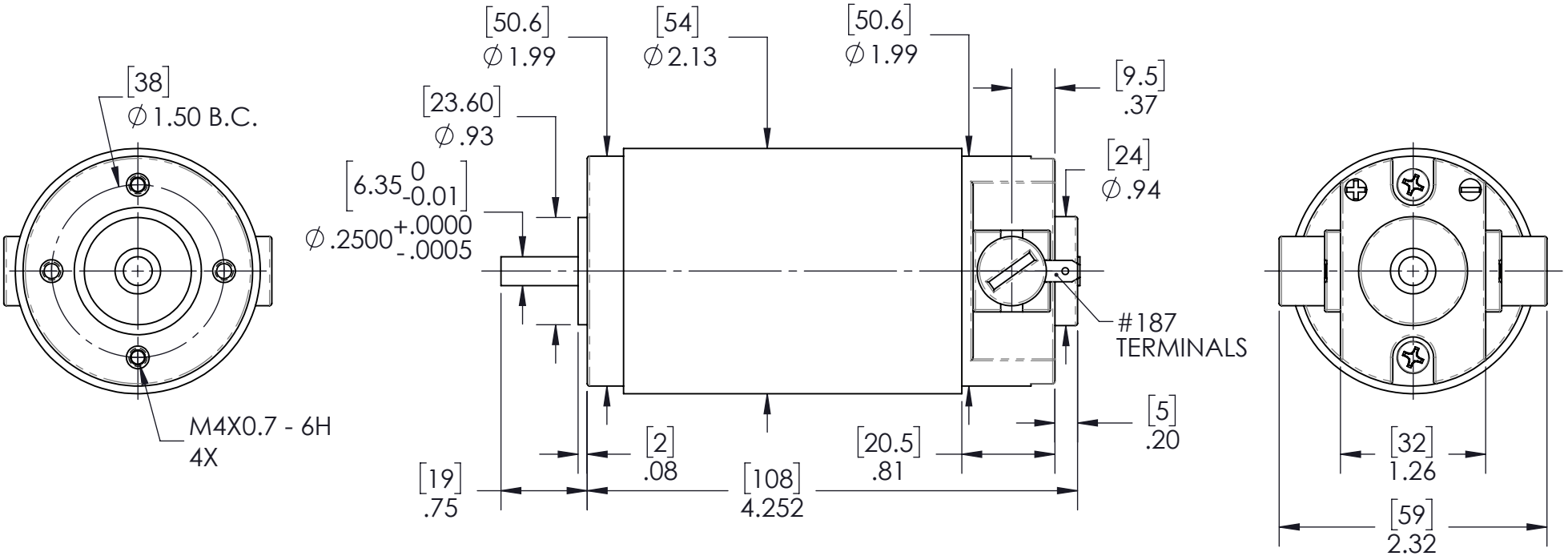

TOLERANCES
X.XX : ±.010
X.XXX : ±.005
FRACTION: ±1/64
ANGLE: ±2°
UNLESS OTHERWISE SPECIFIED

MULTI PRODUCTS
Company, Inc.

PART NAME/DESCRIPTION: 12/24 VOLT DC MOTOR			
DRAWN BY: DAB	DATE: 8/26/2015	SCALE: 0.75:1	MATERIAL: VARIOUS
CHK'D BY: DMR	DATE: 8/26/2015	PART NUMBER: DCM-1028	
APPR'D BY: RP	DATE: 8/26/2015		

REV.	DESCRIPTION	DATE	ECO#