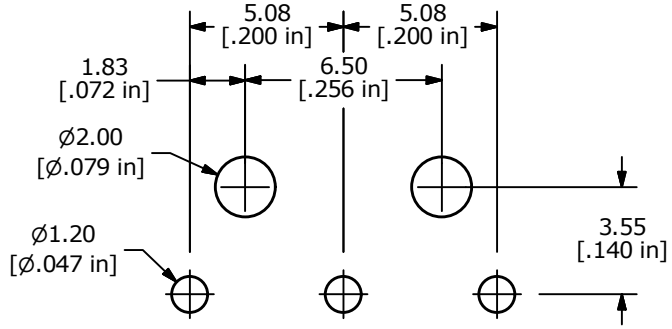

P.C. MOUNTING

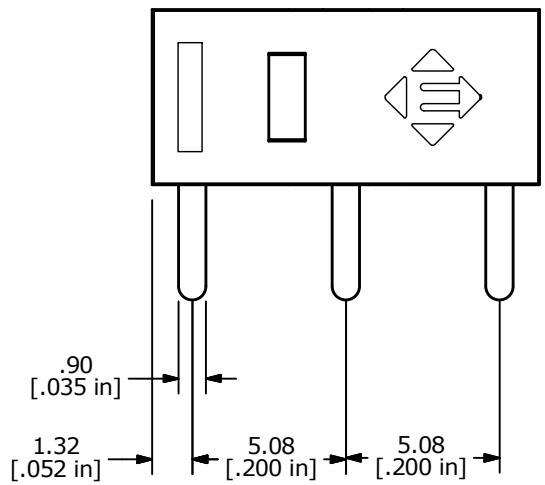

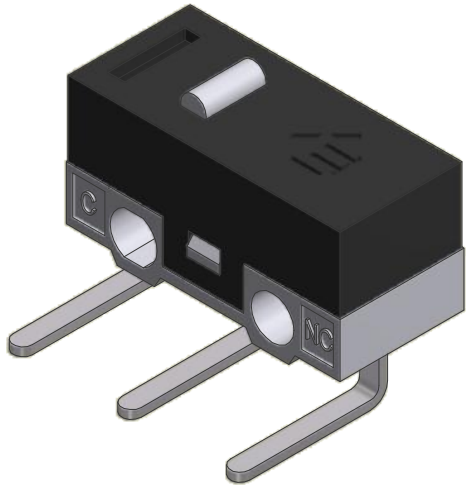

CIRCUIT: SPDT

▲ O.P. (mm)	P.T. (mm)
7.0 ± 0.2	.70 MAX.

O.P. = OPERATING POINT
P.T. = PRE-TRAVEL

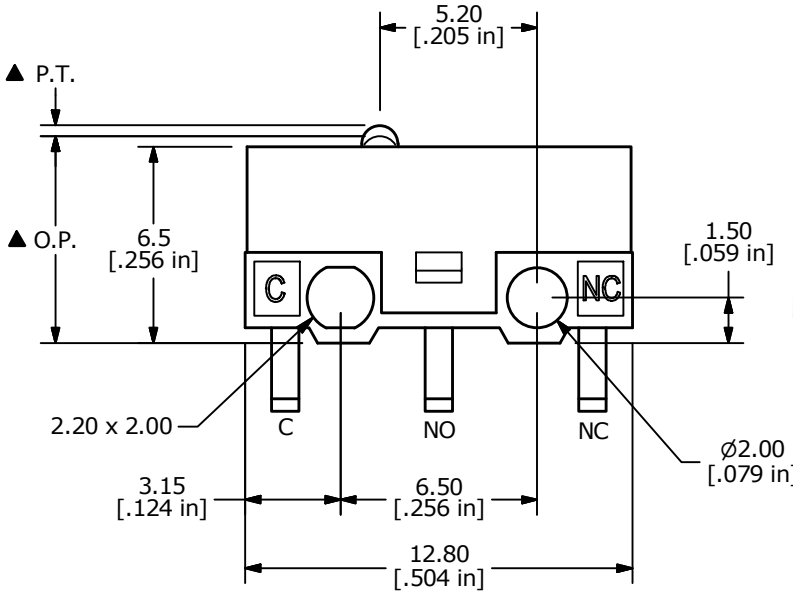

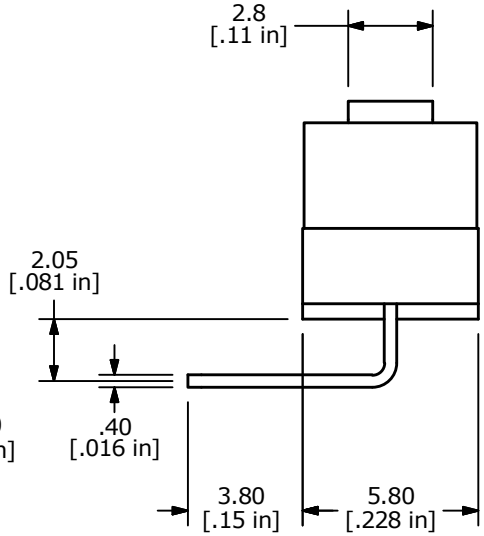

NOTES:
1. ALL DIMENSIONS IN MM [INCH]
2. GENERAL TOLERANCE: X.X = ± 0.4
   X.XX = ± 0.25
▲ 3. RATING: 3A @ 125 VAC UL
   1.5A @ 250 VAC UL
▲ 4. OPERATING FORCE: 130 ± 40 GRAMS
5. OPERATING TEMP: -25°C to 75°C
6. ELECTRICAL LIFE: 10,000 CYCLES MIN.
7. MECHANICAL LIFE: 1,000,000 CYCLES MIN.
8. INSULATION RESISTANCE: 100 MEGA-OHMS MIN.
9. DIELECTRIC STRENGTH: 1000VAC - 1 MINUTE
10. ▲ DENOTES CRITICAL PARAMETER.
11. PACKAGED IN TRAYS, 120 PIECES PER TRAY.

REV	PCR NO	DESCRIPTION	DATE	BY
B	23958	UPDATE DRAWING	7/5/19	MW
A	18425	RELEASE FOR PRODUCTION	3/6/09	BLR

THE INFORMATION CONTAINED IN THIS DOCUMENT IS PROPRIETARY TO E-SWITCH AND IS NOT TO BE COPIED OR TRANSFERRED

E-SWITCH®

TITLE SS0750300F130V1A

SCALE	DATE	DR	DWG	REV
4:1	3/6/2009	BLR	Q971025	B