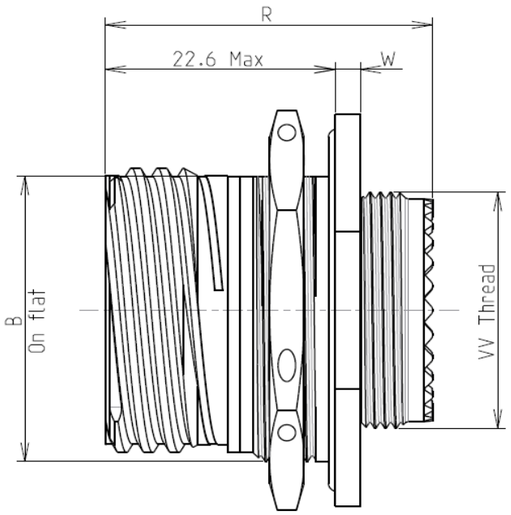

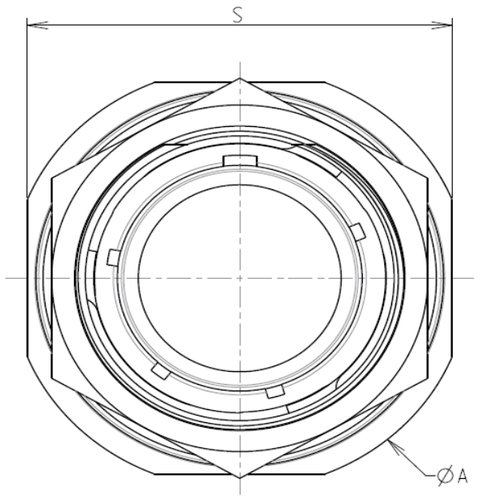

Keying Shown as example

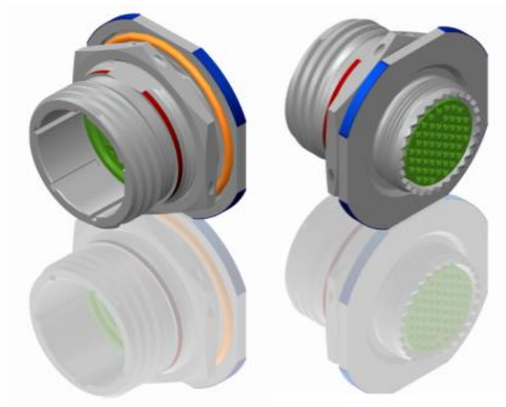

LAYOUT SHOWN AS EXAMPLE

CHARACTERISTICS

-Standard : Based on MIL-DTL-38999 Series III
-Shell Material : Stainless Steel
-Shell Plating : Passivated
-Insulator : Thermoplastic
-Contacts : Copper Alloy
-Seals & Grommet : Silicon Elastomer
-Contact Plating : Gold over copper Alloy 0.8µm minimum
-Durability : 500 Mating cycles
-Delivered with Souriau contacts and Accessories

-Temperature Range : -65°C to +200°C
-Salt Spray : 500 hours

Connector dimension	
Dim	**Nominal**
A	41.3±0.3
B	26.97+0.1/-0.15
R	32.5Max
S	38.1±0.4
W	2.2+0.9/-0.1
VV THREAD	M22x1-6g

SOURIAU shall not be liable for any non-conformity or damage due to a use of the Products which does not comply with the Specifications issued by either of the Parties or by a third party (professional recommendation, technical notice.)

Country	Jurisdiction & Control List
FR	Not Listed

PN: 8D715K15PA

A	08-11-2016	First Release	
ISS	DATE	Latest modification - by	MOD N°

Designed By: Date: **CUSTOMER DRAWING**

TITLE Stainless Steel Receptacle 8D series

SCALE NA | General linear Tolerances: ±-- | NPRDS / PROJECT **859**

SOURIAU WWW.SOURIAU.COM

This document is the property of SOURIAU it must not be reproduced or communicated without permission

FORMAT A3 | SOURIAU DRG N° 8D715K15PA-C | SHEET 1/2

BASIC SERIES:	8D	7	-	15	K	15	P	A

SHELL TYPE : Jam nut Receptacle
CONTACT TYPE : Standard Crimp Contact
SHELL SIZE : 15
PLATING : K = Passivated

ORIENTATION : A
CONTACT TYPE : PIN(500 Matings)
CONTACT LAYOUT : 15-15

Contact Layout

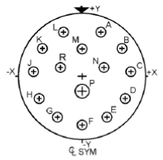

Contacts (Insert arrangement 15-15)					
Contact position ID	Location X-axis (mm)	Location Y-axis (mm)	Contact position ID	Location X-axis (mm)	Location Y-axis (mm)
A	+.100 (2.54)	+.225 (5.72)	J	-.244 (6.20)	+.014 (0.36)
B	+.202 (5.13)	+.140 (3.56)	K	-.202 (5.13)	+.140 (3.56)
C	+.244 (6.20)	+.014 (0.36)	L	-.100 (2.54)	+.225 (5.72)
D	+.218 (5.54)	-.113 (2.87)	M	+.000 (.00)	+.140 (3.56)
E	+.126 (3.20)	-.209 (5.31)	N	+.110 (2.79)	+.040 (1.02)
F	+.000 (.00)	-.245 (6.22)	P	+.000 (.00)	-.077 (1.96)
G	-.126 (3.20)	-.209 (5.31)	R	-.110 (2.79)	+.040 (1.02)
H	-.218 (5.54)	-.113 (2.87)	---	---	---

Shell size	Arrangement no.	Number of contacts	Size contacts	Service rating	Contact location	Supersedes
15	-15	1	16	I	P	MS20052-15
		14	20		All other	

Panel cutout

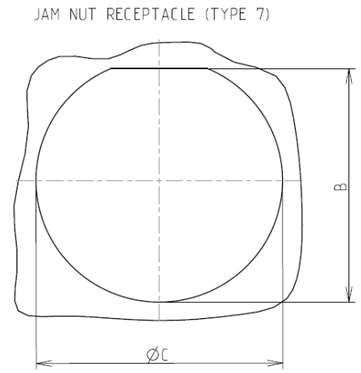

Max. thickness panel for receptacle:Type 7: 3.2 mm

Dim	Nominal
B	27.56+0/-0.25
ØC	28.83+0.25/-0

SOURIAU shall not be liable for any non-conformity or damage due to a use of the Products which does not comply with the Specifications issued by either of the Parties or by a third party (professional recommendation, technical notice.)

Country	Jurisdiction & Control List
FR	Not Listed

PN: 8D715K15PA

ISS	DATE	Latest modification - by	MOD N°
A	08-11-2016	First Release	

Designed By: Date: **CUSTOMER DRAWING**

TITLE Stainless Steel Receptacle 8D series

SCALE NA | General linear Tolerances: ±-- | NPRDS / PROJECT **859**

SOURIAU | WWW.SOURIAU.COM | This document is the property of SOURIAU it must not be reproduced or communicated without permission

FORMAT A3 | SOURIAU DRG N° 8D715K15PA-C | SHEET 2/2