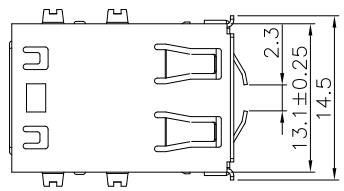

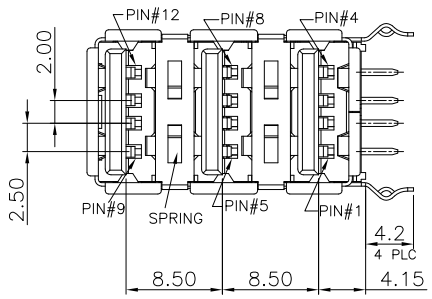

Specifications:
Current Rating:1.5A AC/DC
Voltage Rating:30V AC/DC
Contact Resistance:30m ohm. Max.
Insulation Resistance:1,000M ohm. min.
Withstanding Voltage:750V AC For One Minute
Operating Temperature Range:−40°C ~ +105°C
Material and Finish
Insulator:PBT (UL94V−0)
Insulator:Black
Contact:Brass
Plating:30u" Gold Plated on Contact Area,
Tin Plated on Solder Tail.
Shell:Brass,Nickel Plated

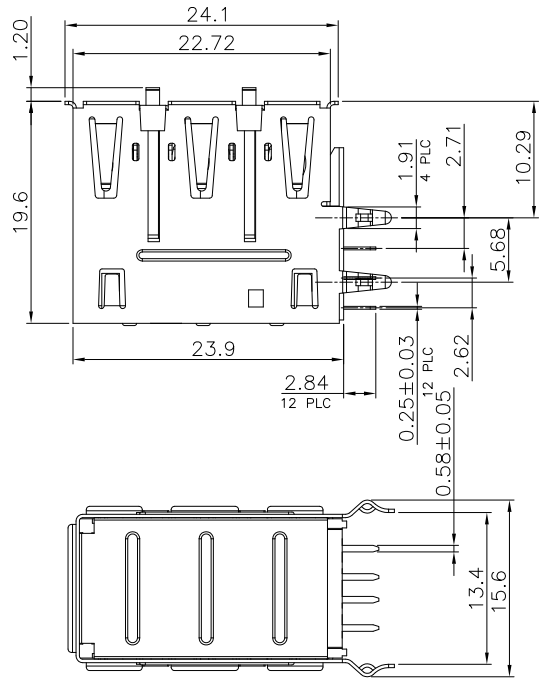

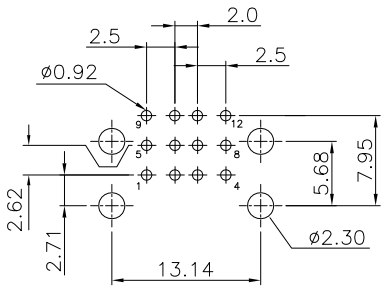

PCB layout
TOLERANCE: ±0.05

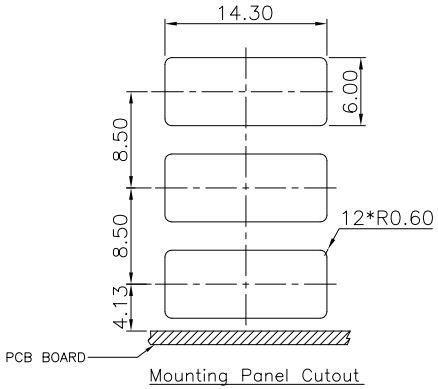

Mounting Panel Cutout

RoHS Compliant

				DRAWN:	GENERAL TOLERANCE: .X=±0.25 .XX=±0.20	CnC Tech Industrial Cable and Connector Technology
				CHECKED:	UNIT: MM	DESCRIPTION: USB A Type PCB Socket Right Angle,30u"
					SCALE:1:1	SIZE A4
	05−FEB−2020			APPROVAL:	SHEET: 1 / 2	PART NO: 1002-012-01020
REV	DATE	FILE	BY		PROJECTION:	